YORK®
BY JOHNSON CONTROLS

YFTM Fan Coil

YFTM Fan Coil Units

EUROVENT CERTIFIED PERFORMANCE

YFTM is the fan coil that continues the York tradition based on high reliability and low noise levels.
YFTM is the result of great commitment in terms of energy and resources to offer a more modern product from every point of view:

CONTENTS

- Construction — Page 4
- Models — Page 5
- Dimensions, Weight, Water content — Page 6
- EUROVENT Certification — Page 8
- Operation limits — Page 9
- Cooling emission tables — Page 10
- Water pressure drop — Page 15
- Controls — Page 20
- Unit with infra-red remote control — Page 28
- Accessories — Page 34

- ***DESIGN:*** York proposes a fan coil with an absolutely innovative design which is a patented decorative model. A fan coil with such developed aesthetics constructed with **continuous and rounded curves** was never been designed before.
  For the first time the **YFTM** fan coil has the casing made almost completely of **plastic,** apart from the front panel. This allows an exceptional and continuous attention to details.
  Even **the controls,** both on board and remote for wall installation, have been completely re-designed to perfectly match the equipment and the surrounding environment.

- ***QUIETNESS:*** York exploited all its research and development skills to **reduce the noise level** of this fan coil. This aspect is increasingly important both for designers and end users.
  The result is an extremely low noise level on the **YFTM** model with tangential fan, as proved by the Eurovent certification.

- ***RANGE:*** the **YFTM** series is absolutely unique: **no other fan coil** comes with such a wide range of models.
  The York fan coils are available on demand in a wide range of colours and are equipped with every kind of accessoires and controls to meet all electronic and installation needs.

- ***EASY USE:*** every detail has been carefully studied to guarantee **easy** assembly, use and maintenance of the fan coils, like for instance the functional symmetric feet, the wide valve space (170 mm) and easy access to the filter in all models.
  Moreover each version has **the same internal structure,** identical in both horizontal and vertical models, in order to standardize production and guarantee a greater flexibility in distribution and installation.

NEW PLASTIC OUTLET GRID IN ONE SINGLE PIECE: EXTRAORDINARY DESIGN AND STRENGTH

York take part to the Eurovent program of fan coil performance certification.
The official figures are published in the Eurovent web site (**www.eurovent-certification.com**).
The tested performances are:

- Cooling total emission at the following conditions:
  - Water temperature +7°C E.W.T. +12°C L.W.T.
  - Entering air temperature +27°C dry bulb +19°C wet bulb
- Heating emission (2 pipe units) at the following conditions:
  - Entering water temperature +50°C
  - Entering air temperature +20°C
  - *Water flow rate as for the cooling conditions*
- Cooling sensible emission at the following conditions:
  - Water temperature +7°C E.W.T. +12°C L.W.T.
  - Entering air temperature +27°C dry bulb +19°C b.u.
- Heating emission (4 pipe units) at the following conditions:
  - Water temperature +70°C E.W.T. +60°C L.W.T.
  - Entering air temperature +20°C

• Fan absorption • Water pressure drop • Sound power

YFTM version with tangential fan

The series ***YFTM*** is equipped with an exclusive tangential fan assembly which has a 120 mm diameter, the largest one on this kind of unit.
Its special spiral shape guarantees a perfect and continuous airflow on the whole coil surface, optimizes thermal exchange and avoids the annoying "pumping" effect of other kinds of tangential fans.
The noise level has been remarkably reduced, as proved by the Eurovent certification.

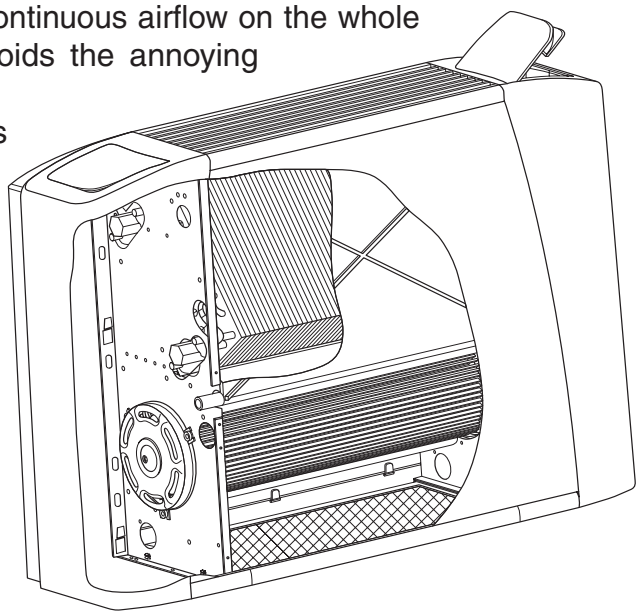

- *5 sizes (300 - 1000 m^3/h)*
- *1 coil: 3 or 4 rows*
- *2 coils: 3 or 4 rows (cooling) and 1 row (heating)*
- *5 versions:* ***(VC, HC, CD)***

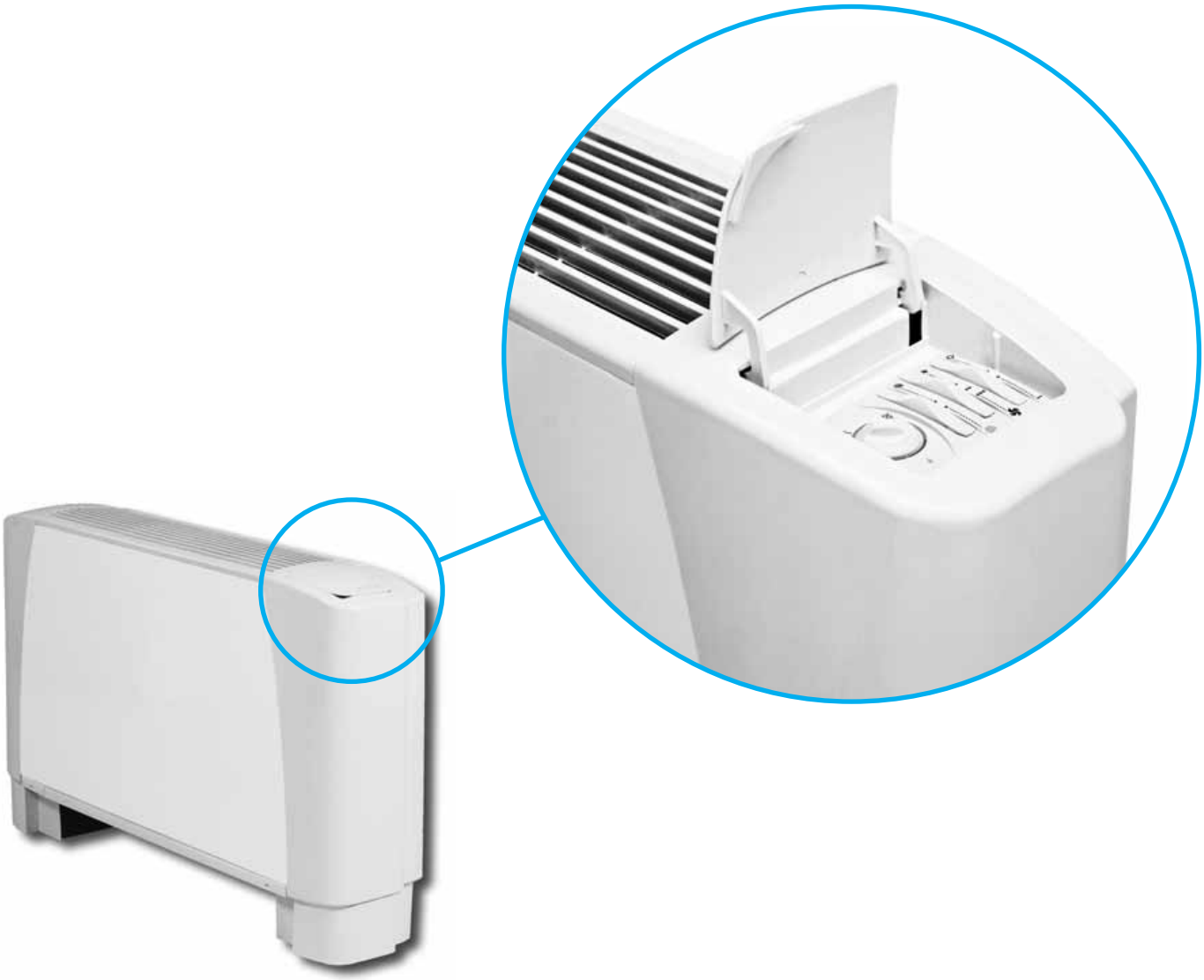

Construction

Outer casing
Made from strong synthetic lateral corners and from galvanized and prepainted frontal steel sheet.
The plastic top grid has fixed louvres and is reversible in order to distribute the air in two different directions.
Standard colours:
- lateral corners and top grid: **Pantone 427C (light grey)**
- frontal sheet: **RAL 9003 (white)**
- other colours on request.

Inner casing
Made from galvanized steel with closed cell insulation.

Filter
The filtration medium is a washable polypropylene net and the filter frame is made of galvanized steel.
Special plastic sliding guides allow for easy insertion and removal of the filter.

Fan assembly
The tangential fan assembly is composed of two fan shrouds: an external one with an evolving plastic section and an internal one of holed, shaped steel. The fan has an external diameter of 120mm and is the lenght of the coil. The fins are concave and are positioned in a spiral shape along the whole lenght of the fan.

Electric motor
The motor is wired for single-phase with three speeds and thermal protection (klixon).
The motor is secured on antivibration mountings and is fitted on the outside of the inner casing.
Protection IP 20, class B.

Coil
It is manufactured from drawn copper tube and the aluminium fins are mechanically bonded onto the tube by an expansion process. The coil has two $^1/_2$ inch BSP internal connections and 1/8 inch BSP air vent and drain.
The coil is not suitable for use in corrosive atmosphere or in environments where aluminium may be subject to corrosion.
Flow and return pipe connections are situated at the same end on the left side looking at the unit. On request we can deliver the unit with the connections on the right end side: this must be specified on the order as this operation can not be carried out on site during installation.

Condensate collection tray
Made from plastic with an “L” shape fitted on the inner casing.
The outside diameter of the condensate discharge pipe is 15mm.

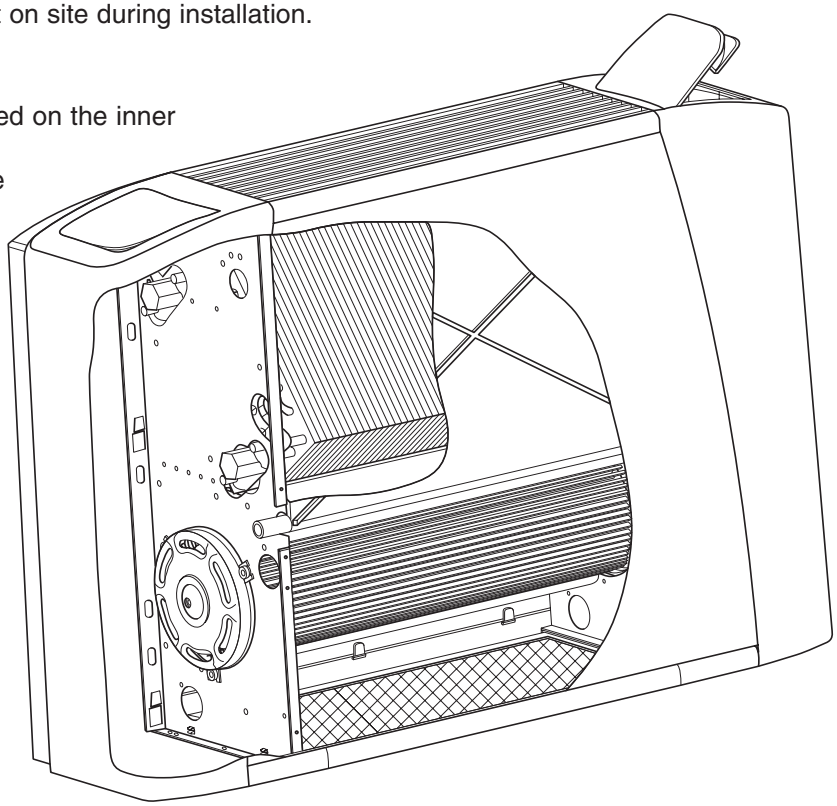

Controls and Accessories
See pages 20 - 35.

Models

VC
Vertical Casing *– Wall Installation*

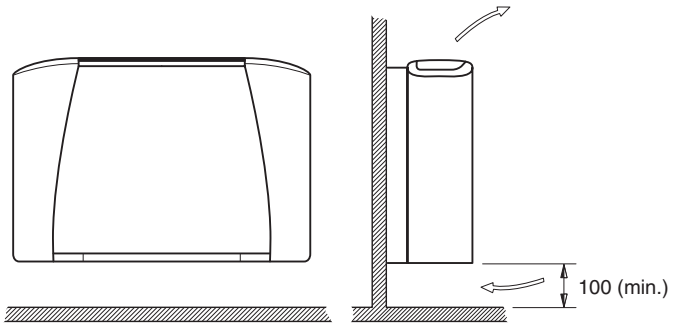

VC
Vertical Casing *– Ceiling Installation*

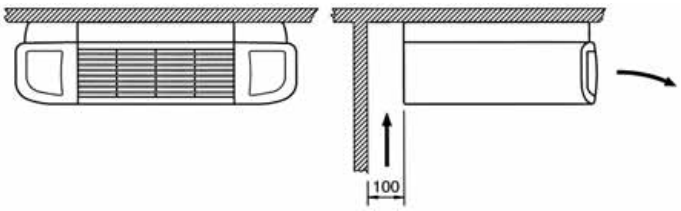

Note: the **VC** model can also be installed horizontally leaving behind a 100 mm gap for air intake. To connect **VC** exposed units to wall remote controls use the terminal adaptor kit Code 9060103.

HC
Vertical Casing *– Floor Installation*

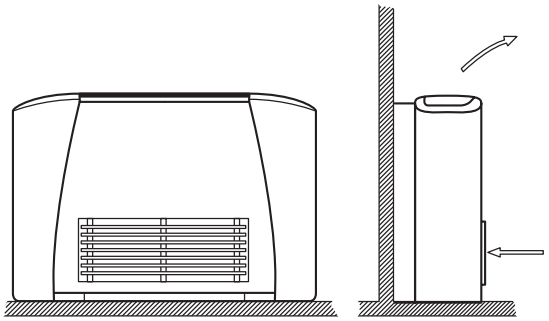

HC
Horizontal Casing

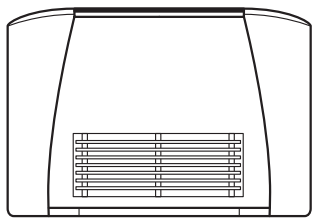

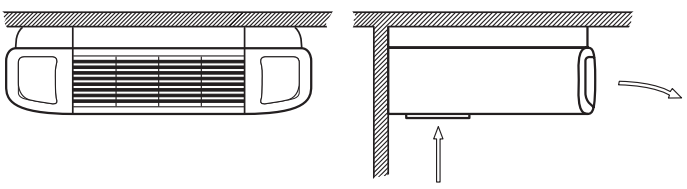

CD
Vertical Concealed

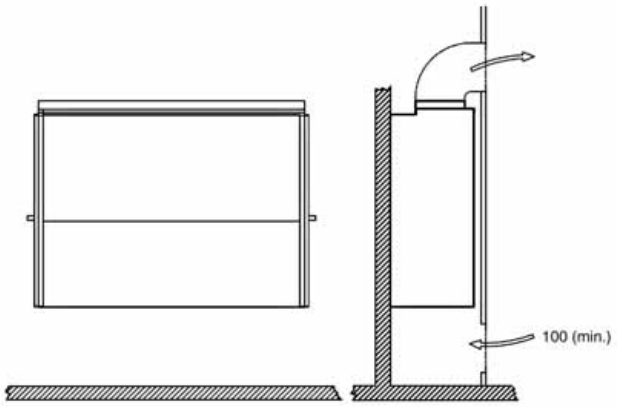

CD
Horizontal Concealed

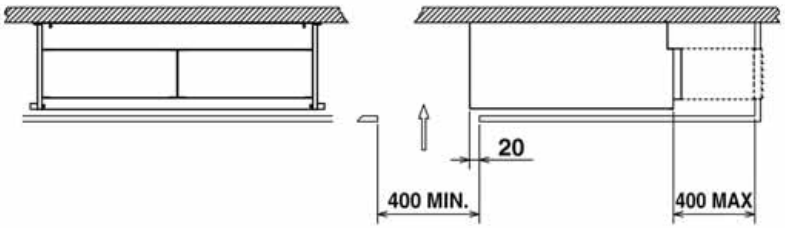

Note: for the best operation of ***YFTM*** **CD** units don't connect any duct on the return side and respect the minimum suggested dimension of the air intake grid.

Dimensions, Weight, Water content

VC
Vertical Casing

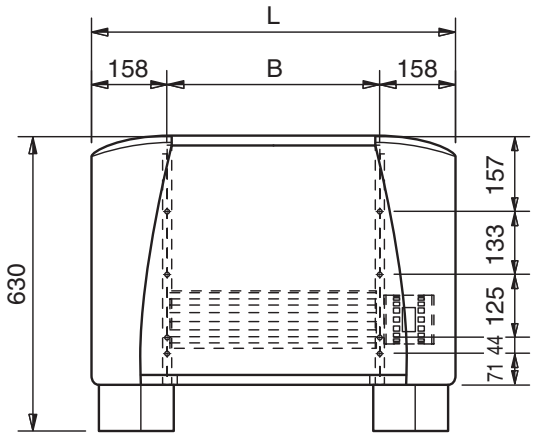

HC
Vertical Casing

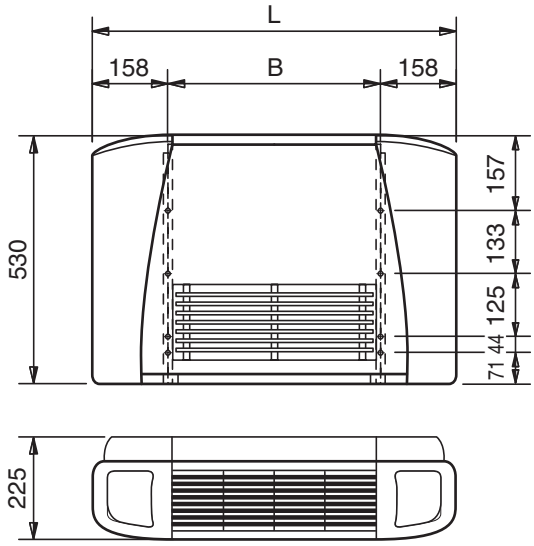

COIL CONNECTIONS

3 or 4 ROW COIL

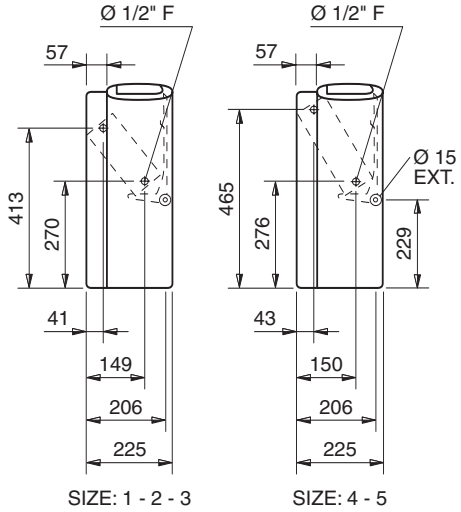

1 ROW ADDITIONAL COIL

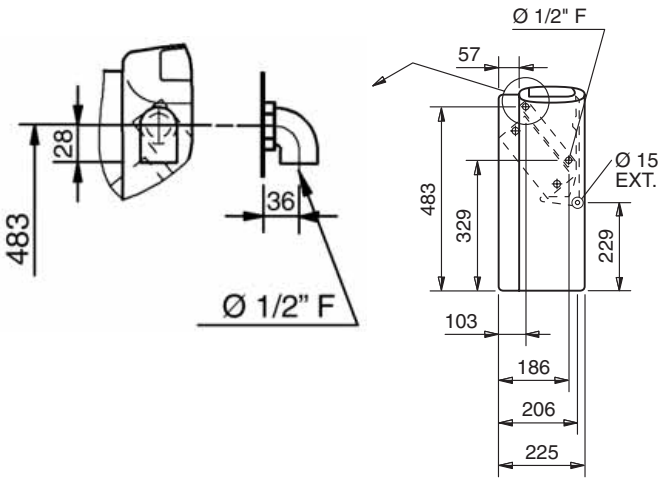

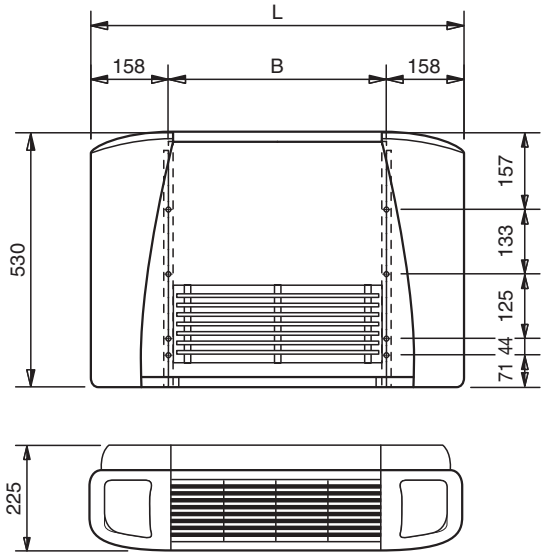

HC
Horizontal Casing

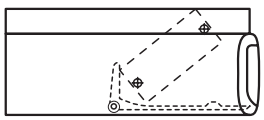

SIZE: 1 - 2 - 3

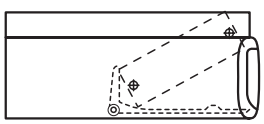

SIZE: 4 - 5

CD
Vertical Concealed

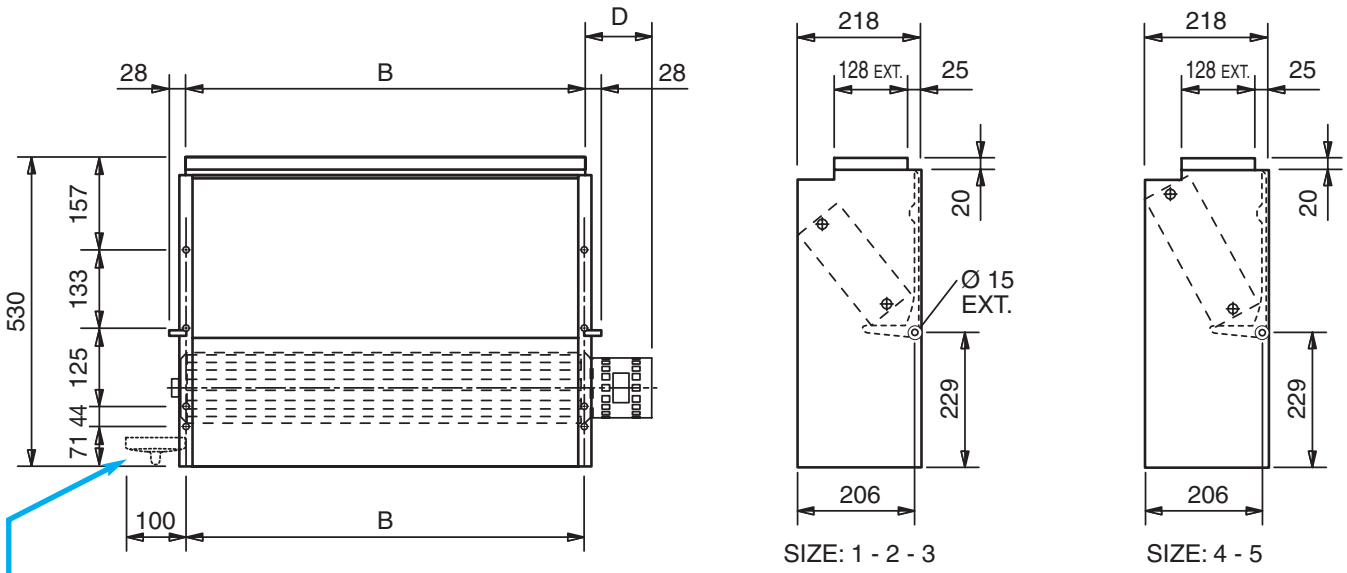

Condensate tray (optional)

CD
Horizontal Concealed

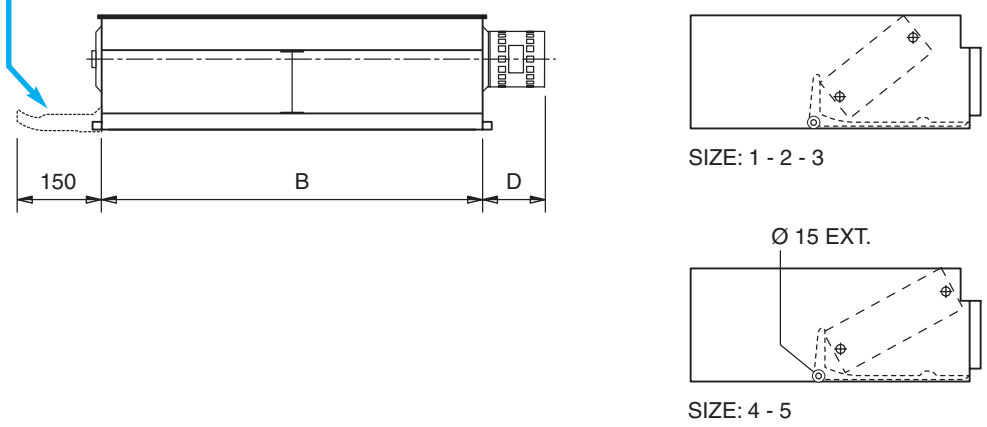

MODEL	130	140	230	240	330	340	430	440	530	540
kg	15	17	20	23	23	26	24	27	29	33
l *	0.6	0.8	0.9	1.3	1.3	1.7	1.6	2.2	1.7	2.4
B	454		669		884		884		1099	
L	770		985		1200		1200		1415	
D	85		85		95		95		88	

* Coil water contents (Litres)

YFTM version

2 pipe units.

The following standard rating conditions are used:

COOLING

Entering air temperature + 27°C d.b., + 19°C w.b.
Water temperature + 7/12°C

HEATING

Entering air temperature + 20°C
Entering water temperature + 50°C

water flow rate as for the cooling conditions

MODEL		YFTM 130			YFTM 230			YFTM 330			YFTM 430			YFTM 530		
Speed		1	2	3	1	2	3	1	2	3	1	2	3	1	2	3
Air flow	m³/h	190	240	300	290	360	450	380	480	600	480	600	750	650	800	1000
Cooling total emission	kW	1,04	1,20	1,40	1,70	2,08	2,40	2,30	2,80	3,40	2,83	3,34	4,05	3,47	4,02	4,60
Cooling sensible emission	kW	0,78	0,92	1,17	1,10	1,36	1,70	1,89	2,30	2,87	1,91	2,29	2,99	2,57	3,14	3,88
Heating	kW	1,45	1,66	2,08	2,30	2,70	3,10	2,90	3,60	4,30	3,50	4,20	5,02	4,50	5,30	6,30
ΔP Cooling	kPa	2,8	3,7	4,6	7,0	9,8	12,0	6,0	10,0	13,2	11,0	14,8	19,7	16,1	21,4	27,4
ΔP Heating	kPa	2,1	2,9	3,7	6,2	8,0	9,8	6,2	8,4	11,0	9,2	12,4	16,4	15,6	20,5	26,1
Fan	W	27	30	40	37	45	50	42	50	65	50	58	80	57	70	85
Sound power Lw dBA	dB(A)	34	41	48	35	42	47	36	42	48	41	46	52	45	50	55
Sound pressure Lp dBA	dB(A)	25	32	39	26	33	38	27	33	39	32	37	43	36	41	46

MODEL		YFTM 140			YFTM 240			YFTM 340			YFTM 440			YFTM 540		
Speed		1	2	3	1	2	3	1	2	3	1	2	3	1	2	3
Air flow	m³/h	190	240	300	290	360	450	380	480	600	480	600	750	650	800	1000
Cooling total emission	kW	1,20	1,45	1,70	1,90	2,30	2,60	2,50	3,10	3,70	3,15	3,75	4,50	4,00	4,50	5,30
Cooling sensible emission	kW	0,90	1,15	1,40	1,34	1,66	1,99	1,69	2,08	2,62	2,34	2,77	3,52	2,61	3,12	3,85
Heating	kW	1,50	1,90	2,25	2,40	2,80	3,30	3,15	3,90	4,65	3,80	4,60	5,55	4,80	5,80	6,90
ΔP Cooling	kPa	4,0	6,0	8,0	5,7	7,3	9,2	11,1	15,0	20,1	19,7	26,7	36,6	11,9	15,6	20,6
ΔP Heating	kPa	3,9	5,4	7,2	4,7	6,0	7,6	10,8	14,8	20,8	17,8	24,4	33,4	10,0	13,2	17,4
Fan	W	27	30	40	37	45	50	42	50	65	50	58	80	57	70	85
Sound power Lw dBA	dB(A)	34	40	48	36	42	48	36	43	47	41	46	52	47	51	56
Sound pressure Lp dBA	dB(A)	25	31	39	27	33	39	27	34	38	32	37	43	38	42	47

4 pipe units.

The following standard rating conditions are used:

COOLING

Entering air temperature + 27°C d.b., + 19°C w.b.
Water temperature + 7/12°C

HEATING

Entering air temperature + 20°C
Water temperature + 70/60°C

MODEL		YFTM 130+1			YFTM 230+1			YFTM 330+1			YFTM 430+1			YFTM 530+1		
Speed		1	2	3	1	2	3	1	2	3	1	2	3	1	2	3
Air flow	m³/h	190	240	300	290	360	450	380	480	600	480	600	750	650	800	1000
Cooling total emission	kW	1,04	1,20	1,40	1,70	2,08	2,40	2,30	2,80	3,40	2,83	3,34	4,05	3,17	3,67	4,20
Cooling sensible emission	kW	0,78	0,92	1,17	1,10	1,36	1,70	1,70	2,07	2,59	1,91	2,29	2,99	2,28	2,79	3,45
Heating	kW	1,05	1,18	1,44	1,95	2,25	2,60	2,45	3,00	3,50	3,00	3,40	3,95	3,28	3,80	4,40
ΔP Cooling	kPa	3,4	4,6	5,7	8,5	11,8	14,5	7,7	10,5	13,9	11,0	14,8	19,7	12,4	16,1	20,6
ΔP Heating	kPa	1,4	1,8	2,4	5,4	6,9	8,9	2,1	2,9	3,7	2,7	3,5	4,4	3,3	4,3	5,4
Fan	W	27	30	40	37	45	50	42	50	65	50	58	80	57	70	85
Sound power Lw dBA	dB(A)	34	41	48	36	43	47	39	43	48	43	48	54	44	48	54
Sound pressure Lp dBA	dB(A)	25	32	39	27	34	38	30	34	39	34	39	45	35	39	45

The sound pressure levels apply to the reverberant field of a 100 m³ room and a reverberation time of 0.5 sec.

Operation limits

Highest water inlet temperature..... + 85°C
Lowest water inlet temperature..... + 5°C
Highest working pressure..... 8 bar

Note: For **HC** model the maximum installation height is 2,8 m.
On heating it must be payed attention to rooms where the floor temperature is particularly low (for example less than 5°C).
In this situation the floor can cool the lower layer of air to a level that can stop the uniform diffusion of the hot air coming from the unit.

Water flow limits for 3 row coil (l/h)

MODEL	YFTM 130	YFTM 230	YFTM 330	YFTM 430	YFTM 530
Lowest	100	150	150	200	250
Highest	500	750	1000	1000	1500

Water flow limits for 4 row coil (l/h)

MODEL	YFTM 140	YFTM 240	YFTM 340	YFTM 440	YFTM 540
Lowest	100	150	200	250	300
Highest	750	1000	1000	1500	2000

Water flow limits for 1 row coil (l/h)

MODEL	YFTM 130+1 YFTM 140+1	YFTM 230+1 YFTM 240+1	YFTM 330+1 YFTM 340+1	YFTM 430+1 YFTM 440+1	YFTM 530+1 YFTM 540+1
Lowest	60	80	100	130	160
Highest	250	350	450	500	650

Motor electrical data

MODEL		YFTM 130 (+1) YFTM 140 (+1)	YFTM 230 (+1) YFTM 240 (+1)	YFTM 330 (+1) YFTM 340 (+1)	YFTM 430 (+1) YFTM 440 (+1)	YFTM 530 (+1) YFTM 540 (+1)
230/1 50Hz	W	38	40	60	70	85
	A	0,15	0,16	0,20	0,27	0,35
	μF	1	1,5	1,25	2	1,5

Emission (k) and air flow (Q) correction factors at high speed in accordance to the requested available pressure (Δp).

MODEL		YFTM 1	YFTM 2	YFTM 3	YFTM 4	YFTM 5
ΔP 05 Pa	Q=m³/h	270	410	560	700	950
	(W) · k	0.95	0.94	0.94	0.95	0.96
ΔP 10 Pa	Q=m³/h	250	370	520	650	900
	(W) · k	0.87	0.85	0.88	0.87	0.87
ΔP 15 Pa	Q=m³/h	220	340	470	600	800
	(W) · k	0.80	0.83	0.82	0.81	0.83

Cooling emission
3 row coil

E.A.T. °C: dry bulb + 27, wet bulb + 19

MODEL	Speed	Air flow m³/h m³/sec.	EWT 5 - LWT 10°C			EWT 7 - LWT 12°C			EWT 12 - LWT 17°C		
			Water flow l/h	Emission		Water flow l/h	Emission		Water flow l/h	Emission	
				Tot. Watt	Sen. Watt		Tot. Watt	Sen. Watt		Tot. Watt	Sen. Watt
YFTM 130	High	300 0,08	320	1870	1400	240	1400	1170	130	760	760
	Medium	240 0,07	260	1520	1130	210	1200	920	110	650	650
	Low	190 0,05	230	1320	950	180	1040	780	100	570	570
YFTM 230	High	450 0,12	545	3150	2300	415	2400	1700	225	1310	1310
	Medium	360 0,10	455	2630	1930	360	2080	1360	195	1130	1130
	Low	290 0,08	390	2270	1540	295	1700	1100	160	930	930
YFTM 330	High	600 0,17	770	4450	3450	590	3400	2870	320	1850	1850
	Medium	480 0,13	610	3540	2620	485	2800	2300	265	1530	1530
	Low	380 0,10	550	3200	2200	400	2300	1890	215	1250	1250
YFTM 430	High	750 0,21	915	5300	4080	700	4050	2990	380	2210	2210
	Medium	600 0,17	740	4500	3160	580	3340	2290	315	1820	1820
	Low	480 0,13	650	3800	2600	490	2830	1910	265	1540	1540
YFTM 530	High	1000 0,28	1055	6100	4670	795	4600	3880	435	2510	2510
	Medium	800 0,22	880	5090	3820	695	4020	3140	380	2190	2190
	Low	650 0,18	760	4390	3200	600	3470	2570	325	1890	1890

Correction factors for different entering air temperatures

E.A.T. C°	K
28/20	1,14
26/18,5	0,93
25/18	0,84

Cooling emission graphs
3 row coil

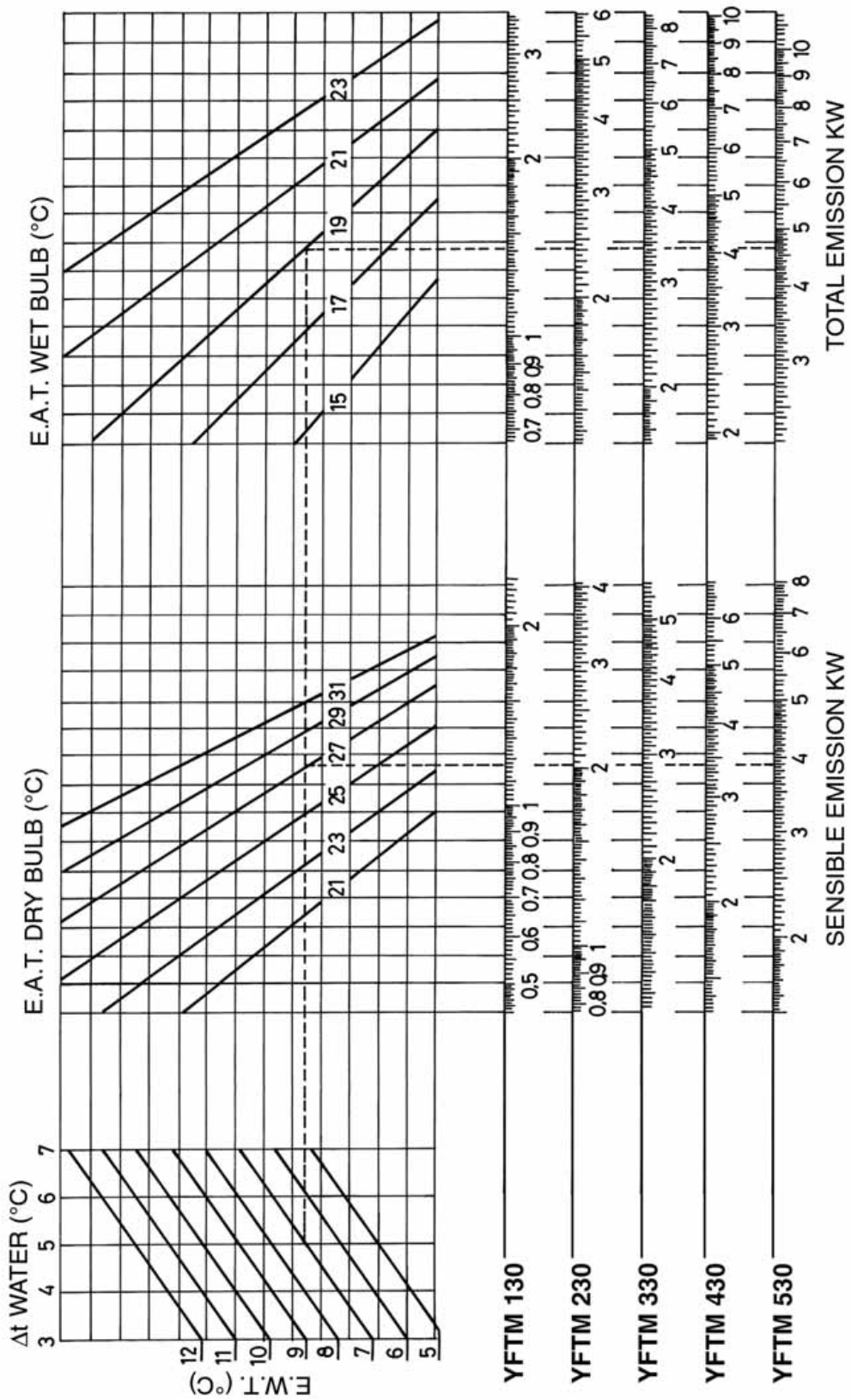

Cooling output figures refer to high speed

Medium and low speed figures are obtained multiplying high speed figures by the following correction factors:

- **Medium speed** TOTAL K = 0,85 SENSIBLE K = 0,80
- **Low speed** TOTAL K = 0,72 SENSIBLE K = 0,66

ATTENTION: a sensible heat figure higher than a total heat figure shows that the cooling is obtained without dehumidification, therefore the emission to refer to is the sensible one.

Cooling emission
4 row coil

E.A.T. °C: dry bulb + 27, wet bulb + 19

MODEL	Speed	Air flow m³/h / m³/sec.	EWT 5 - LWT 10°C			EWT 7 - LWT 12°C			EWT 12 - LWT 17°C		
			Water flow l/h	Emission Tot. Watt	Emission Sen. Watt	Water flow l/h	Emission Tot. Watt	Emission Sen. Watt	Water flow l/h	Emission Tot. Watt	Emission Sen. Watt
YFTM 140	High	300 / 0,08	375	2180	1660	295	1700	1400	160	940	940
	Medium	240 / 0,07	315	1830	1340	250	1450	1150	135	790	790
	Low	190 / 0,05	260	1520	1090	210	1200	900	110	650	650
YFTM 240	High	450 / 0,12	580	3350	2550	450	2600	1990	250	1450	1450
	Medium	360 / 0,10	500	2910	2150	400	2300	1660	215	1250	1250
	Low	290 / 0,08	415	2400	1710	330	1900	1340	180	1040	1040
YFTM 340	High	600 / 0,17	815	4720	3520	640	3700	2620	355	2050	2050
	Medium	480 / 0,13	680	3920	2750	535	3100	2080	290	1690	1690
	Low	380 / 0,10	545	3160	2160	430	2500	1690	235	1360	1360
YFTM 440	High	750 / 0,21	1000	5790	4450	780	4500	3520	430	2500	2500
	Medium	600 / 0,17	820	4740	3460	650	3750	2770	350	2040	2040
	Low	480 / 0,13	690	3980	2840	545	3150	2340	300	1720	1720
YFTM 540	High	1000 / 0,28	1175	6800	5300	915	5300	3850	505	2930	2930
	Medium	800 / 0,22	985	5690	4250	780	4500	3120	425	2450	2450
	Low	650 / 0,18	875	5060	3680	690	4000	2610	375	2180	2180

Correction factors for different entering air temperatures

E.A.T. C°	K
28/20	1,14
26/18,5	0,93
25/18	0,84

Cooling emission graphs
4 row coil

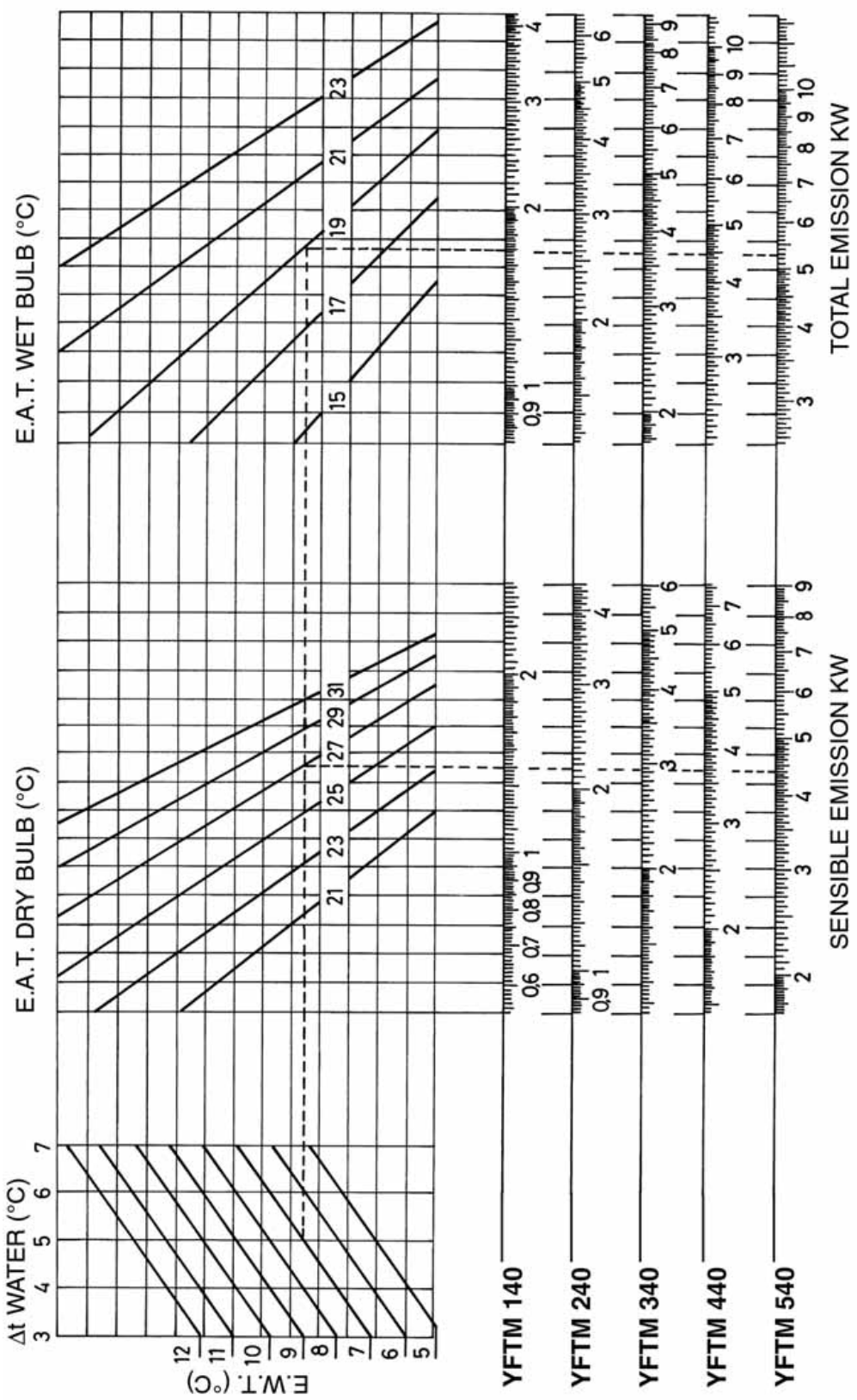

Cooling output figures refer to high speed

Medium and low speed figures are obtained multiplying high speed figures by the following correction factors:

- **Medium speed** TOTAL K = 0,85 SENSIBLE K = 0,80
- **Low speed** TOTAL K = 0,72 SENSIBLE K = 0,66

ATTENTION: a sensible heat figure higher than a total heat figure shows that the cooling is obtained without dehumidification, therefore the emission to refer to is the sensible one.

Heating emission
E.A.T. °C: 20

SIZE	Speed	Air flow m³/h m³/sec.	3 row coil						4 row coil					
			EWT 50 - LWT 40°C		EWT 70 - LWT 60°C		EWT 85 - LWT 75°C		EWT 50 - LWT 40°C		EWT 70 - LWT 60°C		EWT 85 - LWT 75°C	
			Water flow l/h	Emission Watt	Water flow l/h	Emission Watt	Water flow l/h	Emission Watt	Water flow l/h	Emission Watt	Water flow l/h	Emission Watt	Water flow l/h	Emission Watt
1	High	300 0,08	155	1770	295	3400	385	4470	170	1980	330	3800	435	5050
	Medium	240 0,07	120	1400	245	2850	320	3700	145	1700	280	3250	365	4200
	Low	190 0,05	110	1250	210	2400	270	3100	115	1350	230	2650	295	3400
2	High	450 0,12	250	2880	475	5500	625	7250	260	3000	500	5800	660	7650
	Medium	360 0,10	200	2300	390	4500	500	5800	225	2600	435	5050	570	6600
	Low	290 0,08	175	2000	330	3800	430	4950	190	2200	365	4200	465	5400
3	High	600 0,17	335	3880	640	7400	845	9750	360	4130	690	8000	935	10800
	Medium	480 0,13	270	3150	535	6200	700	8100	295	3400	575	6650	780	9000
	Low	380 0,10	225	2600	435	5050	565	6550	240	2750	460	5300	605	7000
4	High	750 0,21	395	4550	745	8650	985	11400	430	5000	830	9600	1090	12600
	Medium	600 0,17	320	3700	625	7200	810	9400	355	4100	690	8000	910	10500
	Low	480 0,13	270	3150	525	6100	680	7900	295	3400	575	6650	780	9000
5	High	1000 0,28	495	5750	950	11000	1255	14500	550	6400	1060	12250	1425	16500
	Medium	800 0,22	410	4750	785	9100	1030	11900	460	5300	895	10350	1210	14000
	Low	650 0,18	345	4000	675	7800	880	10200	385	4450	745	8650	995	11500

Correction factors for different entering air temperatures

W.T. C°	E.A.T., C°			
	22	18	16	14
50/40	0,91	1,09	1,15	1,23
70/60	0,95	1,05	1,09	1,13
85/75	0,96	1,04	1,07	1,11

Water pressure drop

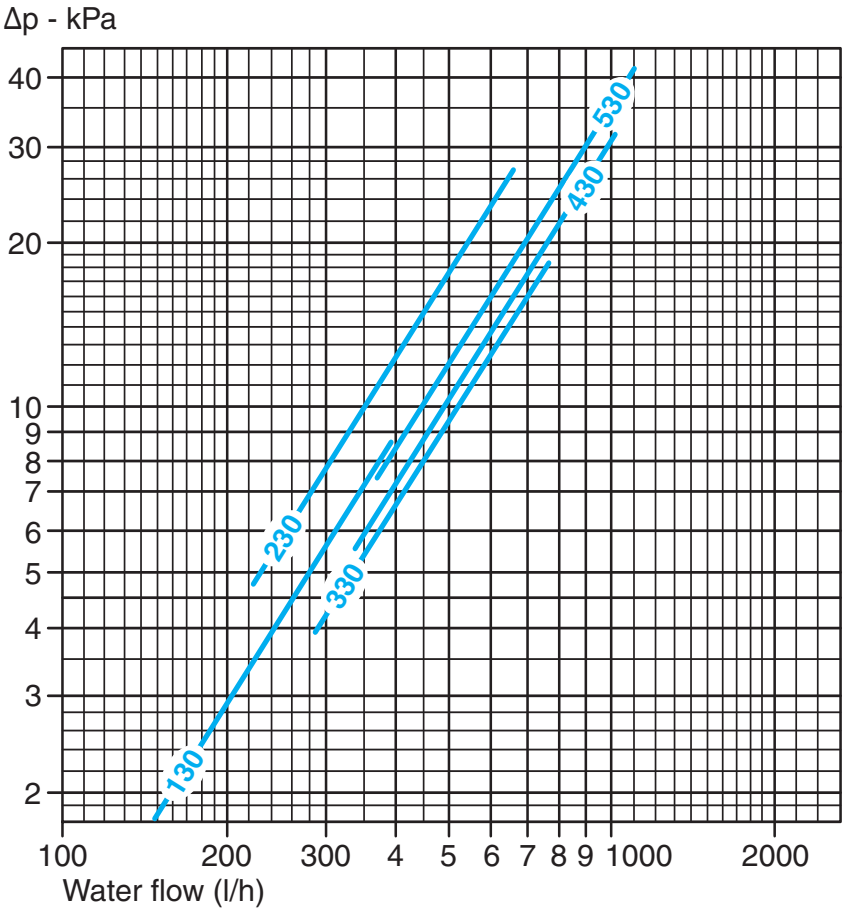

YFTM
3 ROWS

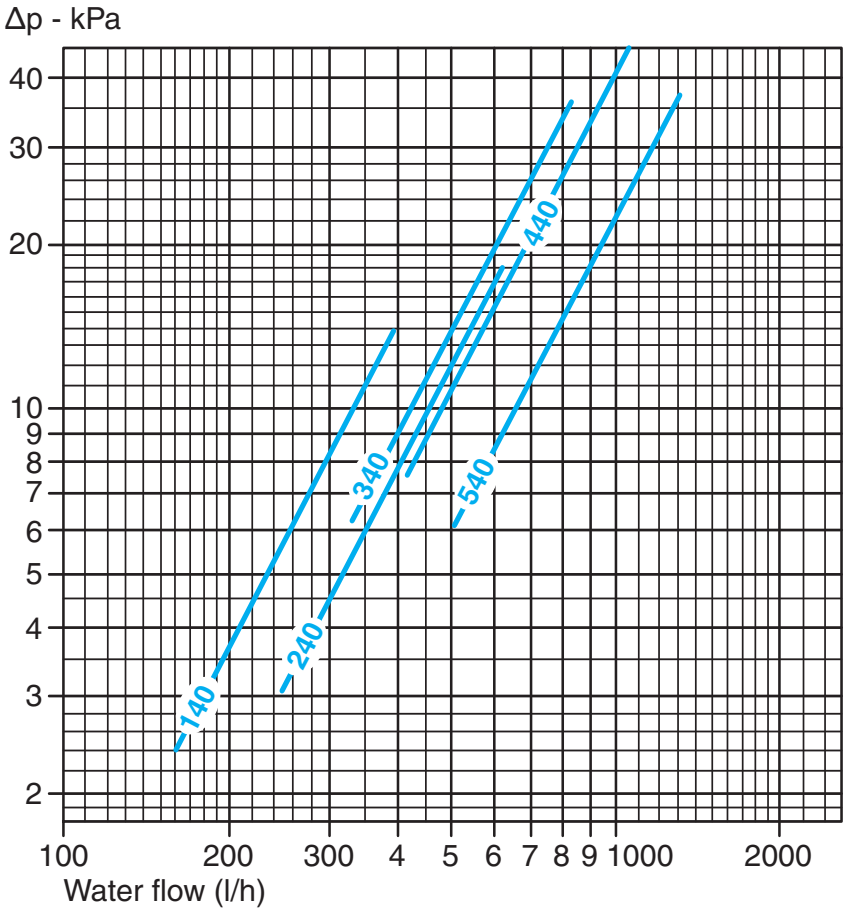

YFTM
4 ROWS

The water pressure drop figures refer to a mean water temperature of ***10°C;*** for different temperatures, multiply the pressure drop figures by the correction factors **K.**

°C	K
20	0,94
30	0,90
40	0,86
50	0,82
60	0,78
70	0,74
80	0,70

Heating emission graphs
3 row coil

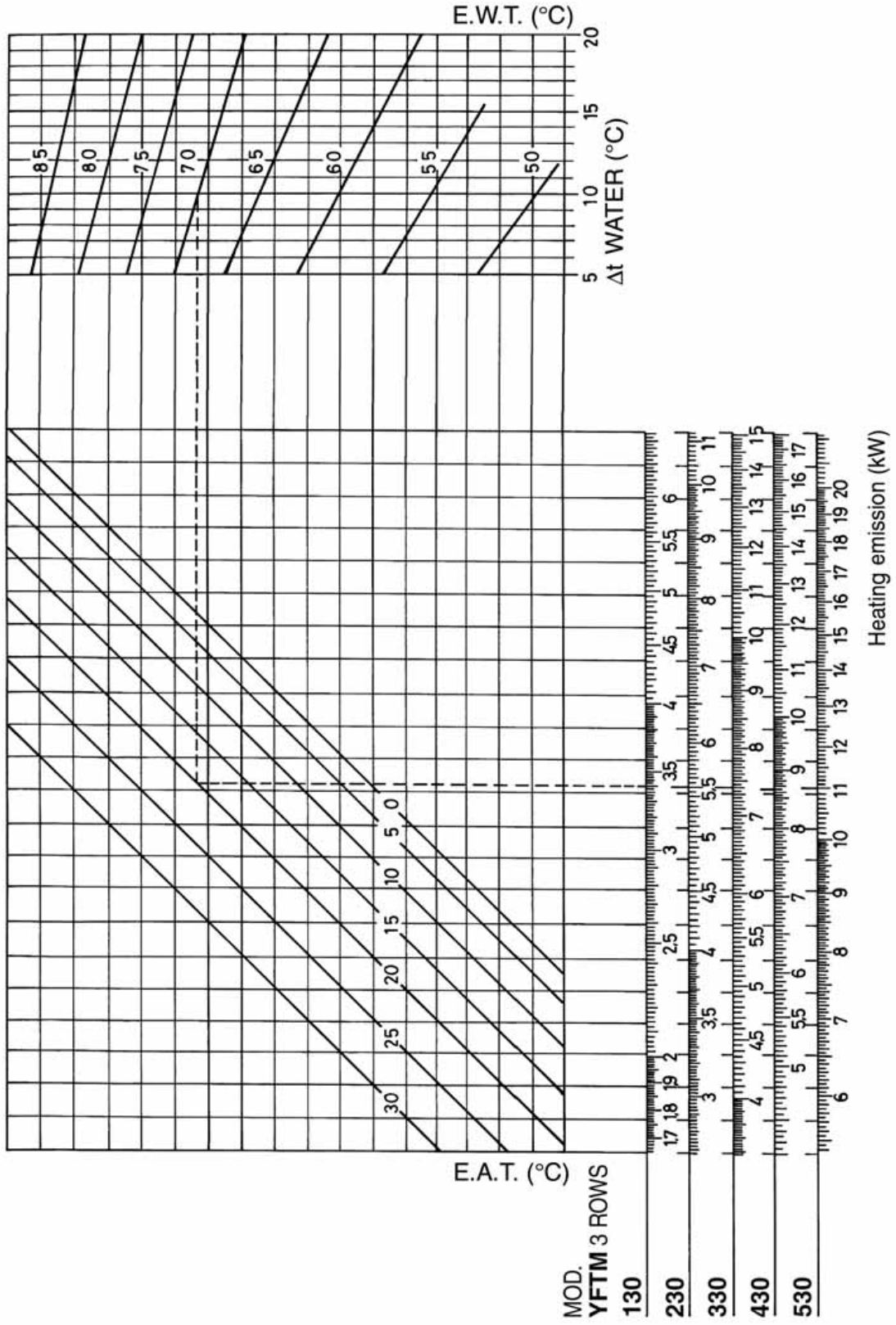

Heating emission figures refer to high speed

Medium and low speed figures are obtained multiplying high speed figures by the following correction factors:

- **Medium speed** = 0,84
- **Low speed** = 0,70

Heating emission graphs
4 row coil

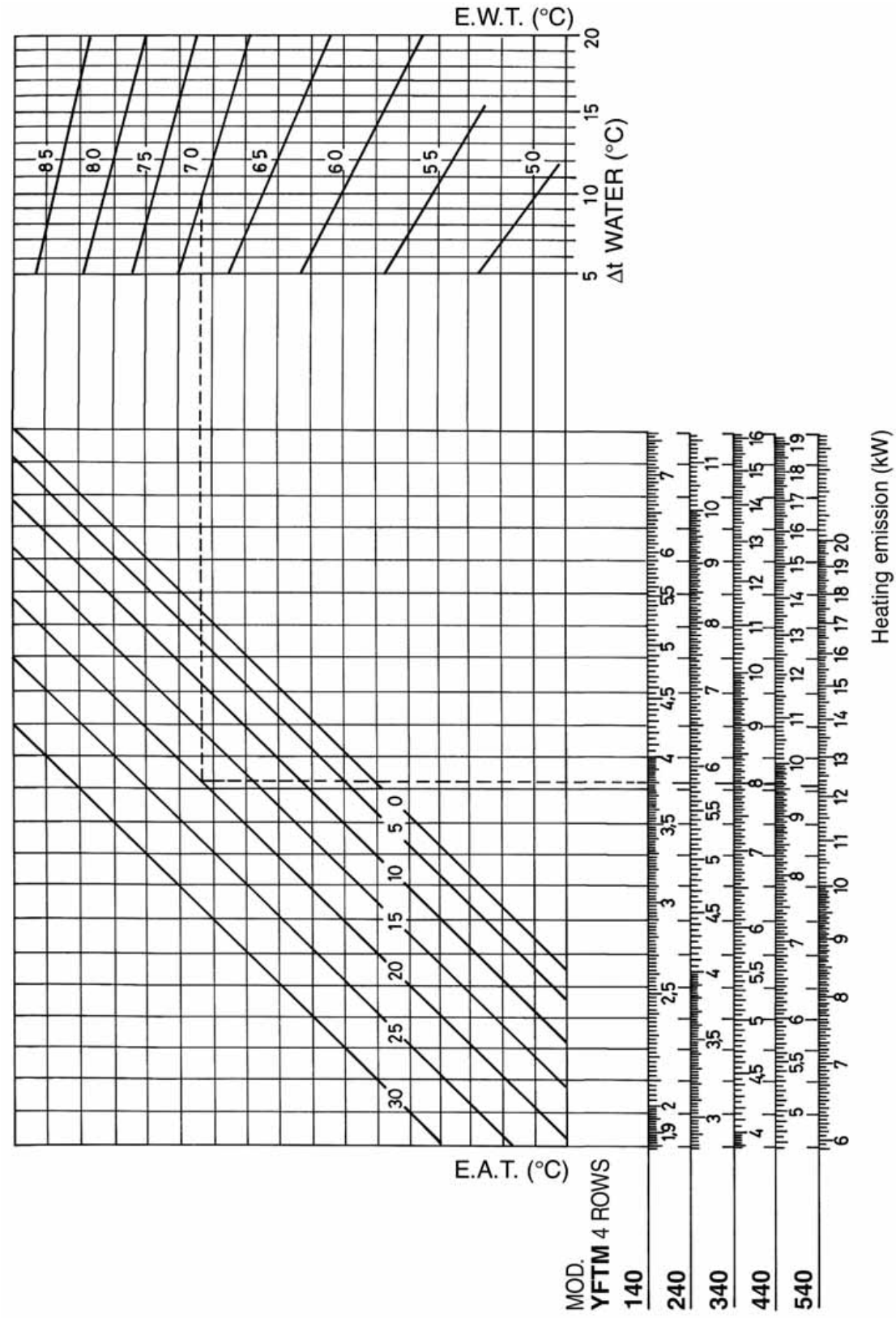

Heating emission figures refer to high speed

Medium and low speed figures are obtained multiplying high speed figures by the following correction factors:

- **Medium speed** = 0,84
- **Low speed** = 0,70

Heating emission
1 row coil (additional coil) E.A.T. °C: 20

SIZE	Speed	Air flow m³/h m³/sec.	EWT 50 - LWT 40°C Water flow l/h	EWT 50 - LWT 40°C Emission Watt	EWT 70 - LWT 60°C Water flow l/h	EWT 70 - LWT 60°C Emission Watt	EWT 85 - LWT 75°C Water flow l/h	EWT 85 - LWT 75°C Emission Watt
1	High	300 0,08	75	860	145	1440	190	2200
	Medium	240 0,07	60	680	120	1180	150	1750
	Low	190 0,05	55	630	105	1050	135	1550
2	High	450 0,12	120	1360	225	2600	300	3450
	Medium	360 0,10	100	1160	195	2250	260	2970
	Low	290 0,08	90	1020	170	1950	225	2580
3	High	600 0,17	155	1820	300	3500	400	4650
	Medium	480 0,13	135	1550	260	3000	340	3900
	Low	380 0,10	120	1360	210	2450	290	3360
4	High	750 0,21	180	2060	340	3950	455	5250
	Medium	600 0,17	150	1750	295	3400	390	4500
	Low	480 0,13	135	1550	260	3000	340	3940
5	High	1000 0,28	230	2570	380	4400	585	6750
	Medium	800 0,22	200	2280	330	3800	490	5700
	Low	650 0,18	170	1940	280	3280	425	4900

Correction factors for different entering air temperatures

W.T. °C	E.A.T., °C 22	18	16	14
50/40	0,91	1,09	1,15	1,23
70/60	0,95	1,05	1,09	1,13
85/75	0,96	1,04	1,07	1,11

Water pressure drop
1 row coil

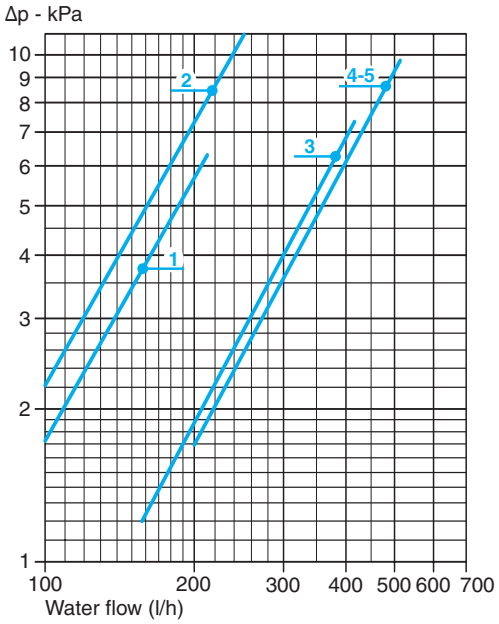

YFTM

The water pressure drop figures refer to a mean water temperature of ***65°C;*** for different temperatures, multiply the pressure drop figures by the correction factors **K.**

Tm °C	K
40	1,14
50	1,08
60	1,02
70	0,96
80	0,90

Heating emission graphs
1 row coil (additional coil)

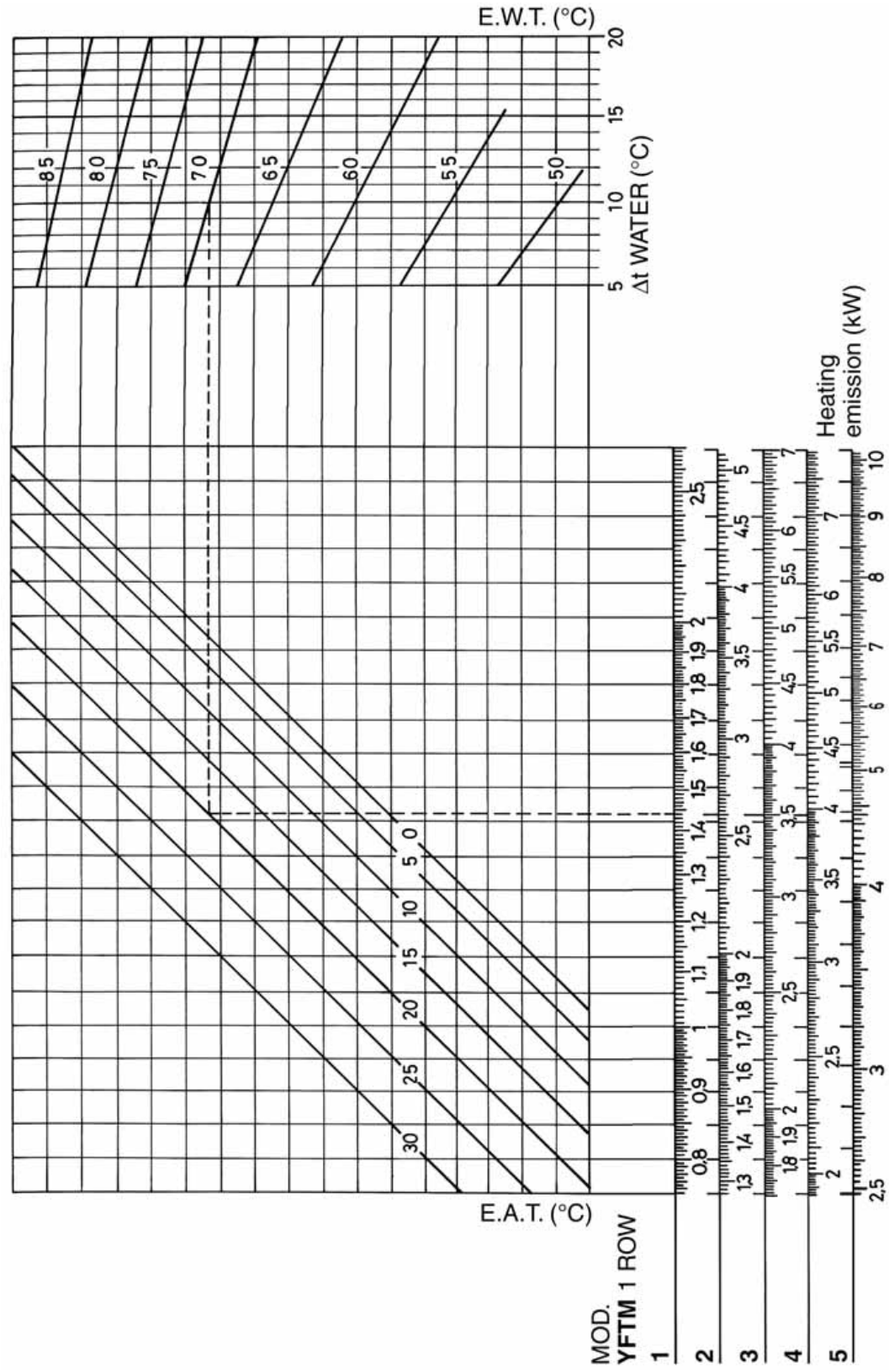

Heating emission figures refer to high speed

Medium and low speed figures are obtained multiplying high speed figures by the following correction factors:

- **Medium speed** = 0,84
- **Low speed** = 0,70

Electronic controls to be fitted on VC-HC units

Identification	Code
BL	9060130K

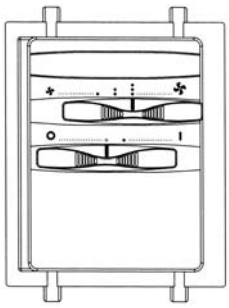

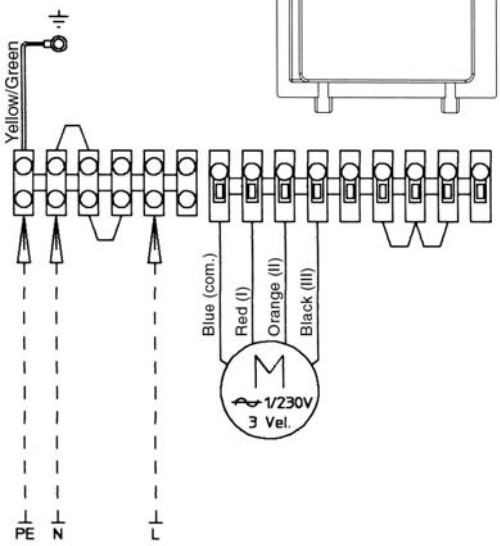

- ON-OFF switch and 3 speed switch.
- Without thermostatic control.

Identification	Code
BTL	9060131K

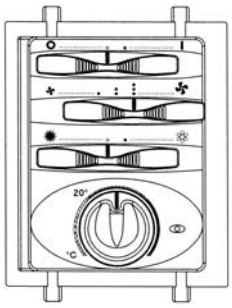

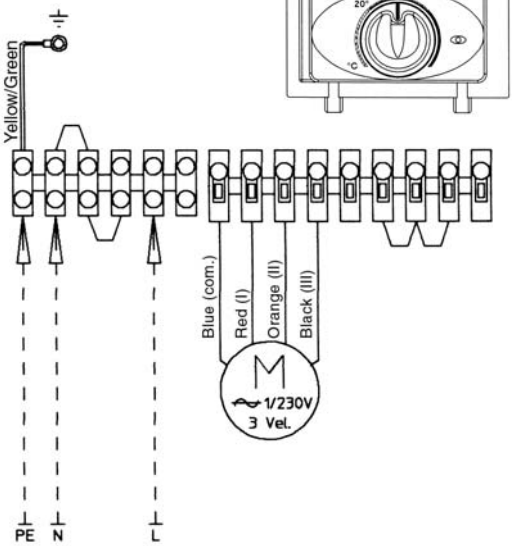

- ON-OFF switch and 3 speed switch.
- Summer/Winter switch.
- Electronic room thermostat for fan control (ON-OFF).

Identification	Code
TL	9060132K

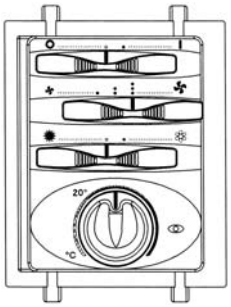

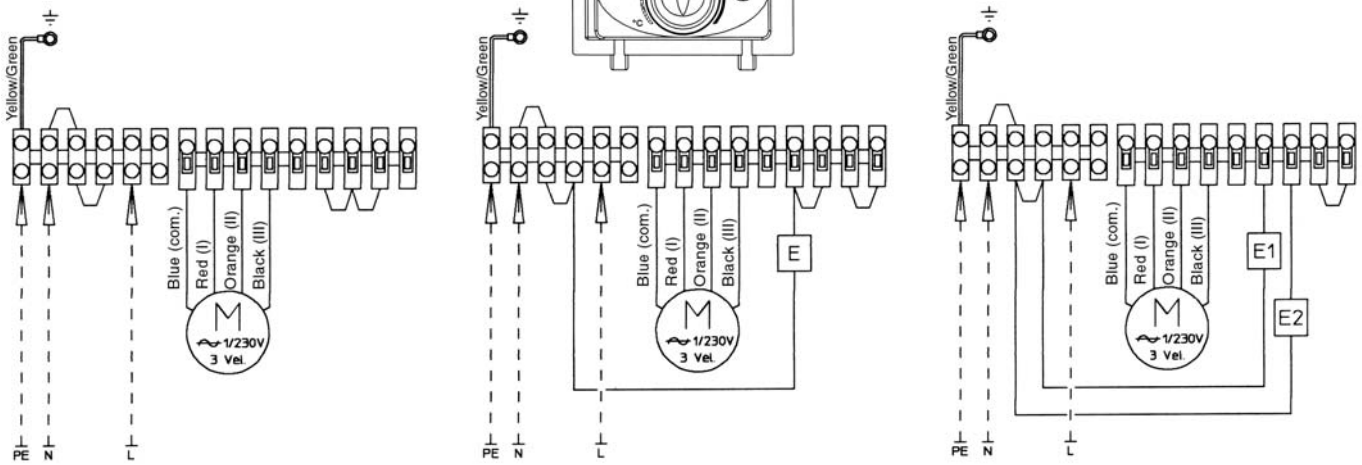

- ON-OFF switch.
- 3 speed switch.
- Summer/Winter switch.
- Electronic room thermostat for fan or valves control (ON-OFF).
- It allows to control the low temperature cut-out thermostat (TME).
- It allows to control the chilled water valve (ON-OFF) and the heating electric resistance (BEL) only in case that hot water is not used in winter (otherwise please use TL-E control with on/off switch for the electric heater).

LEGEND **M** = Fan **E** = Water valve **E1** = Warm water valve **E2** = Chilled water valve

Identification	Code
TLC	9060133K

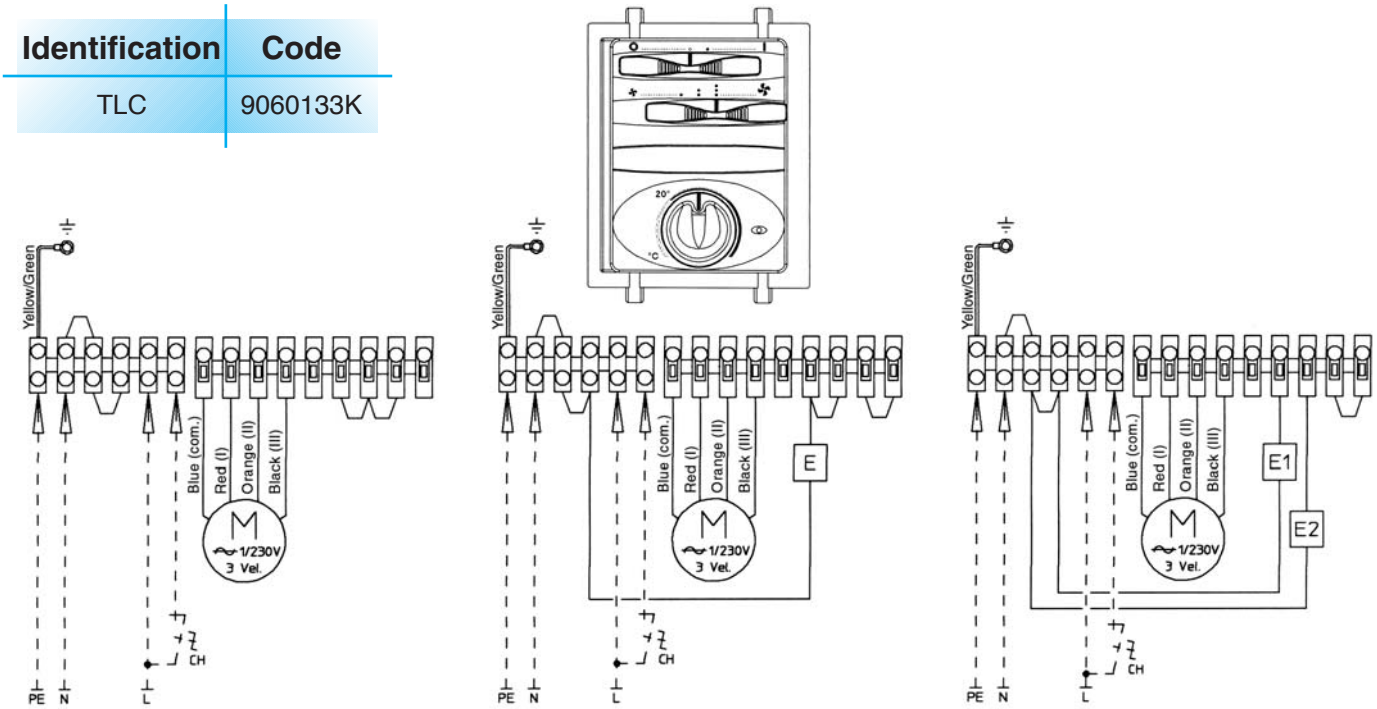

Same control as the TL,
but the Summer/Winter switch is centralized and remote,
or an automatic change-over is fitted on the water pipe (for 2-tube installations only).

Identification	Code
REC-V (for **VC-HC** models)	9060136K

- Speed switch (Slave): it allows to control up to 8 units with only one centralized wall control (1 speed switch for each unit).
- For TR and ATR controls only.

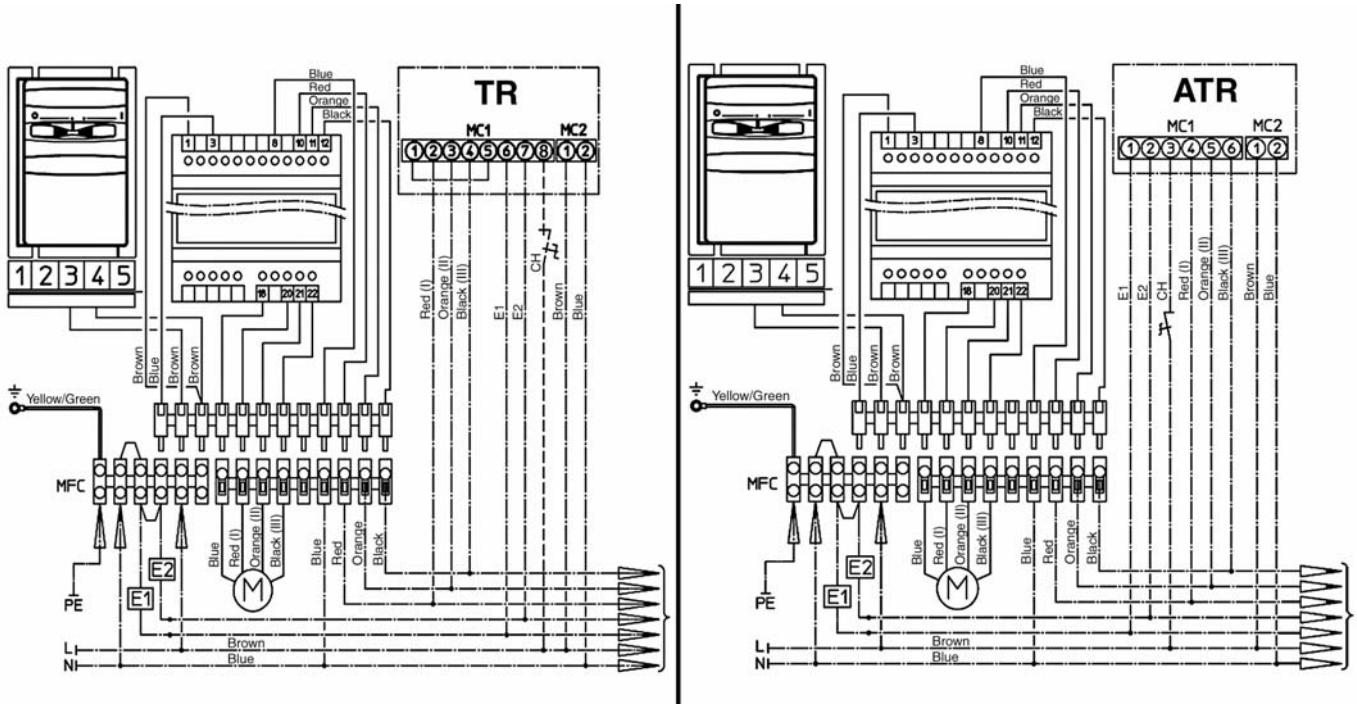

LEGEND

M = Fan
E = Water valve
E1 = Warm water valve
E2 = Chilled water valve
CH = Remote Summer/Winter switch

Identification	Code
ATL	9060134K

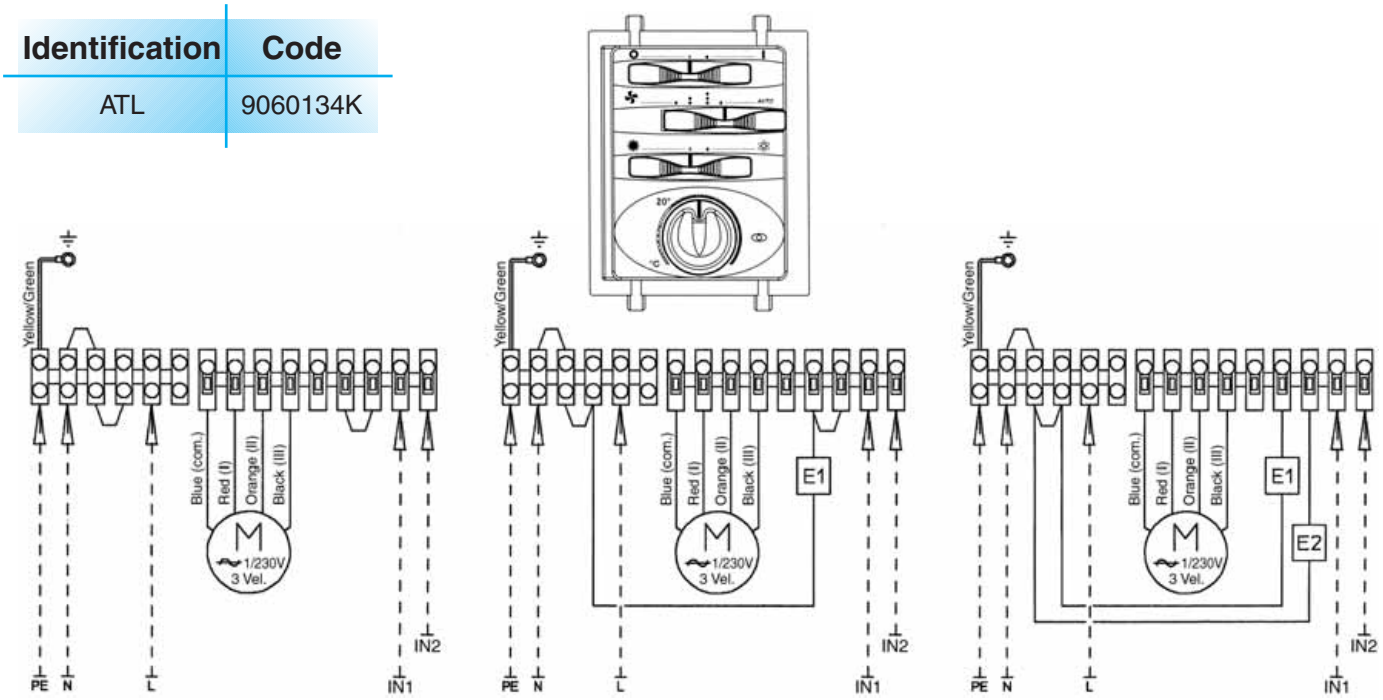

- Manual or automatic speed switch:
  on Auto Mode there is the automatic speed selection
  in accordance to the difference between room temperature and setpoint.
  When the setpoint is reached the fan go on OFF.
- Summer/Winter switch.
- Electronic room thermostat for valve(s) control (ON-OFF).
- Simultaneus thermostatic control of the valves and fan.
- It allows to control the low temperature cut-out (TME).
- It allows to control the summer/winter cycle with a centralized and remote switch or with an automatic change-over fitted on the water pipe (for 2-tube installations only).
- It allows to control the chilled water valve (ON-OFF) and the heating electric resistance (BEL) only in case that hot water is not used in winter (otherwise please use ATL-E control with on/off switch for the electric heater).

N.B.: with 4 pipe installations and continuous chilled and hot water supply, it allows the automatic summer/winter change-over in accordance to the room temperature (-1°C = Winter, +1°C = Summer, Neutral Zone 2°C).

LEGEND

M = Fan
E = Water valve
E1 = Warm water valve
E2 = Chilled water valve
IN1 = SET point reduction (-3°C Winter, +3°C Summer)
IN2 = Remote season Change-Over

Identification	Code
BR	9060540

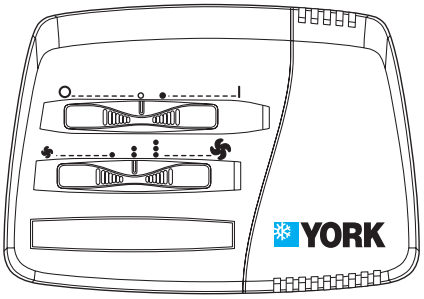

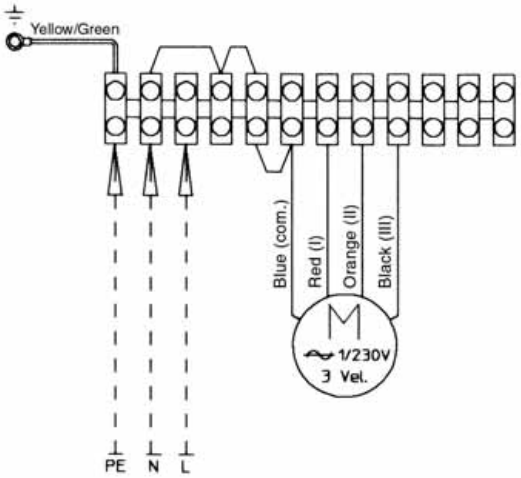

- ON-OFF switch and 3 speed switch.
- Without thermostatic control.

Identification	Code
TR	9060541

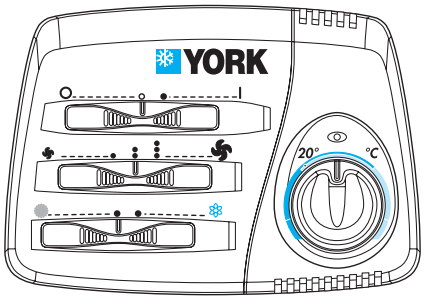

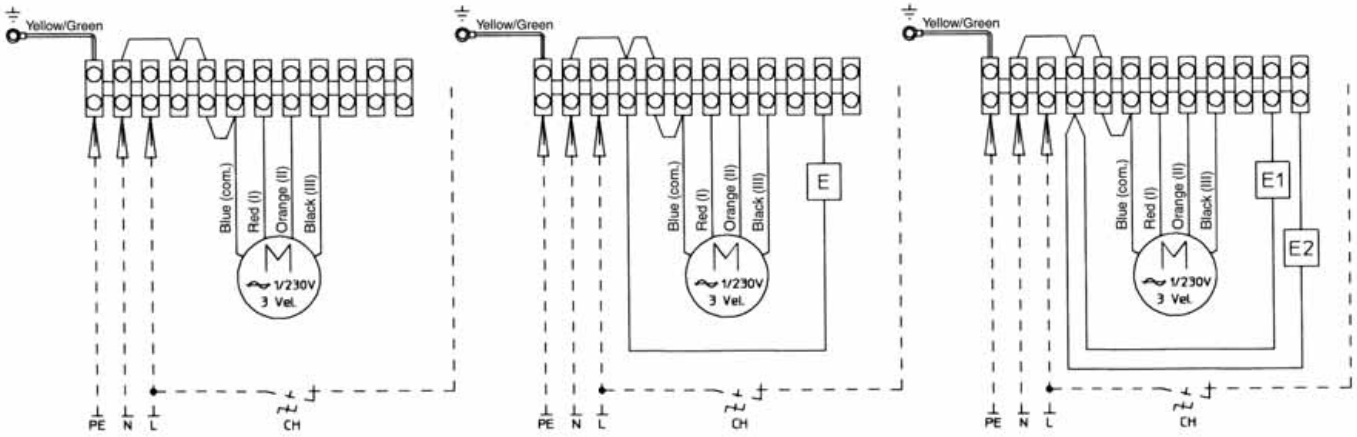

- ON-OFF switch.
- 3 speed switch.
- Summer/Winter switch.
- Electronic room thermostat for fan or valves control (ON-OFF).
- It allows to control the low temperature cut-out thermostat (TME).
- It allows to control the chilled water valve (ON-OFF) and the heating electric resistance (BEL) only in case that hot water is not used in winter (otherwise please use TR-E control with on/off switch for the electric heater).
- It allows to control the summer/winter cycle with a centralized and remote switch or with an automatic change-over fitted on the water pipe (for 2-tube installations only).

LEGEND **M** = Fan **E** = Water valve **E1** = Warm water valve **E2** = Chilled water valve **CH** = Remote Summer/Winter switch

Identification	Code
ATR	9060542

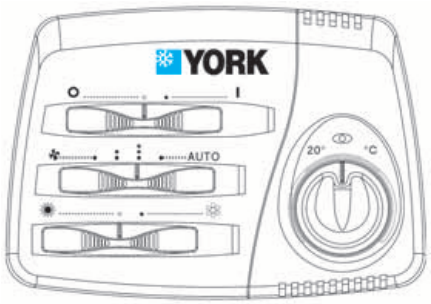

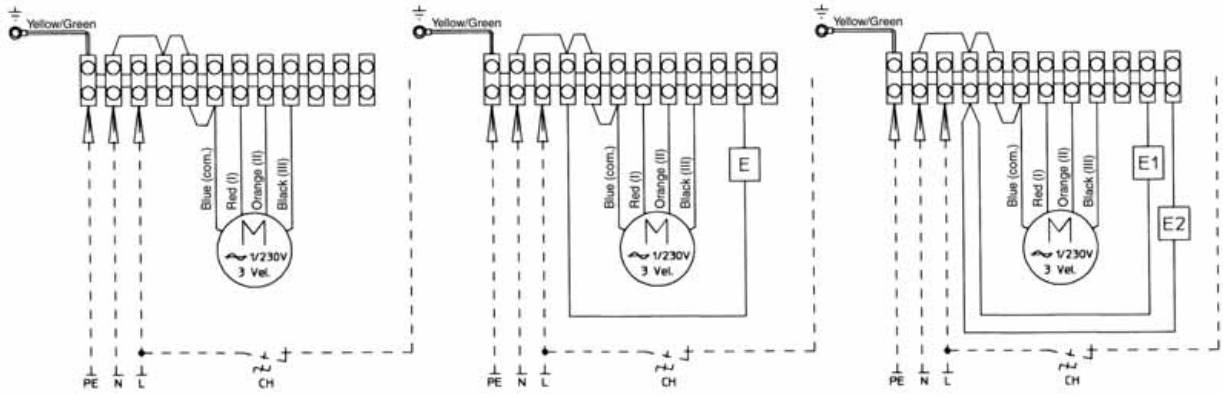

Same characteristic as TR, adding:
- Manual or automatic speed switch.
- Manual or centralized Summer/Winter switch.
- Electronic thermostat for fan control (ON-OFF).
- Electronic thermostat for valve(s) control (ON-OFF).
- Simultaneus thermostatic control of the valves and fan.
- It allows to control the summer/winter cycle with a centralized and remote switch or with an automatic change-over fitted on the water pipe (for 2-tube installations only).

N.B.: with 4 pipe installations and continuous chilled and hot water supply, it allows the automatic summer/winter change-over in accordance to the room temperature (-1°C = Winter, +1°C = Summer, Neutral Zone 2°C).

Identification	Code
REC-H (for **HC-CD** models)	9060137K

- Speed switch (Slave): it allows to control up to 8 units with only one centralized wall control (1 speed switch for each unit).
- For TR and ATR controls only.

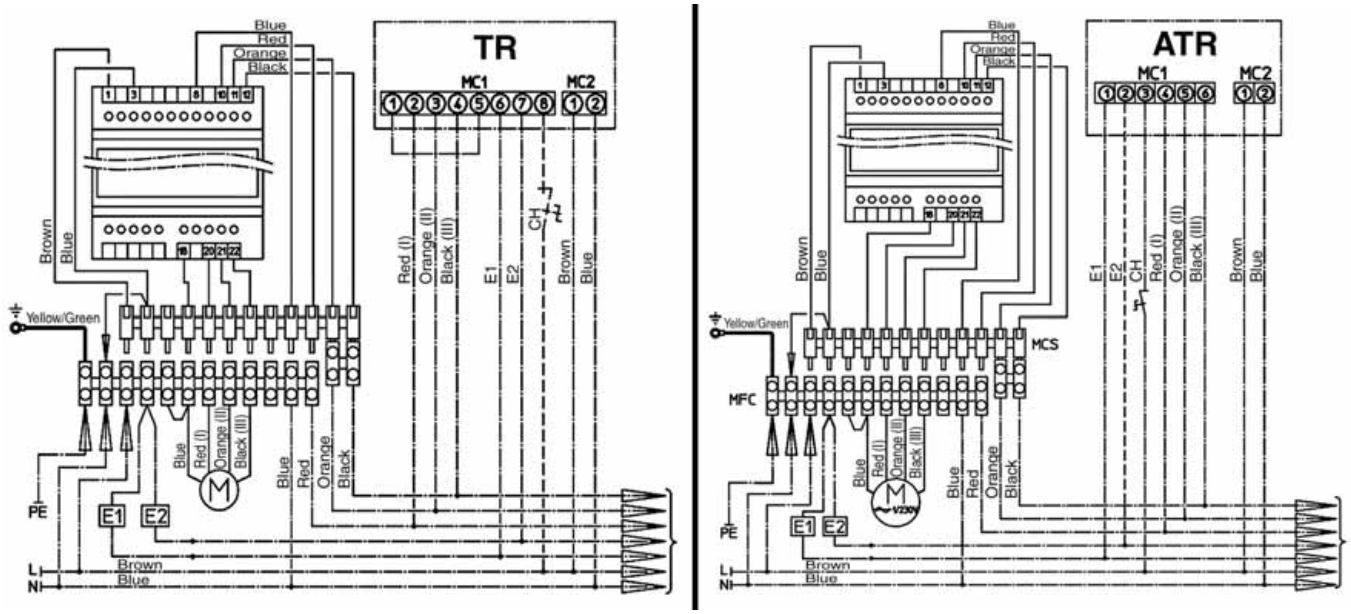

LEGEND **M** = Fan **E** = Water valve **E1** = Warm water valve **E2** = Chilled water valve **CH** = Remote Summer/Winter switch

Identification	Code
DTR	9060521

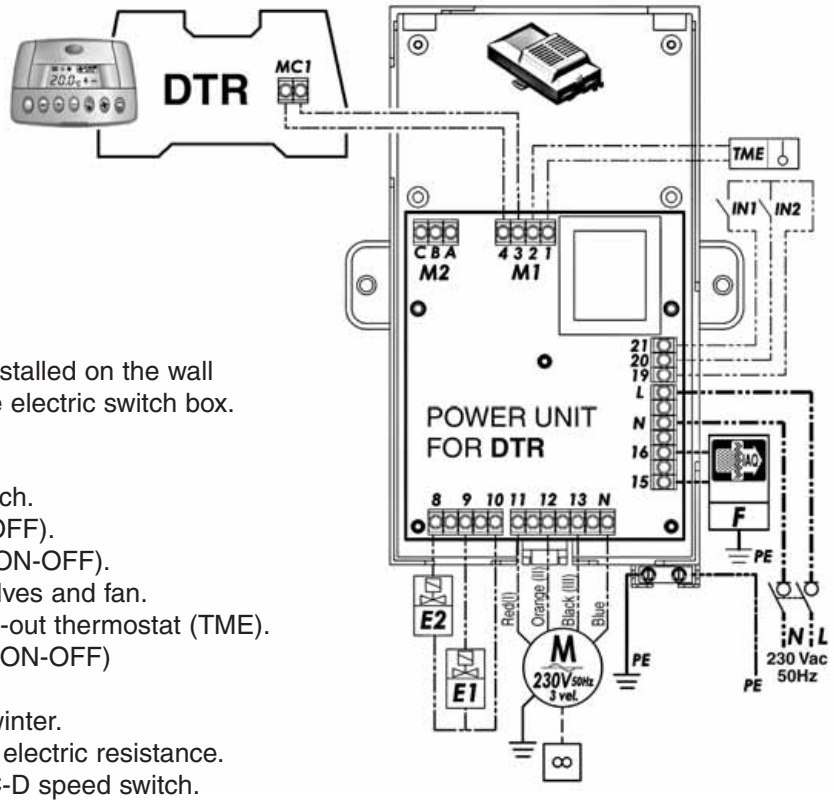

To be installed on the wall
or in the electric switch box.

- Manual or automatic speed switch.
- Manual or centralized Summer/Winter switch.
- Electronic thermostat for fan control (ON-OFF).
- Electronic thermostat for valve(s) control (ON-OFF).
- Simultaneus thermostatic control of the valves and fan.
- It allows to control the low temperature cut-out thermostat (TME).
- It allows to control the chilled water valve (ON-OFF)
  and the heating electric resistance (BEL)
  only in case that hot water is not used in winter.
- It allows to control the fan and the heating electric resistance.
- It allows to control up to 10 units with REC-D speed switch.

N.B.: with 4 pipe installations and continuous chilled and hot water supply, it allows the automatic summer/winter change-over in accordance to the room temperature (-1°C = Winter, +1°C = Summer, Neutral Zone 2°C).

Identification	Code
REC-D	9060139K

Speed switch (slave)

It allows to control up to 10 units with only one DTR centralized wall control.

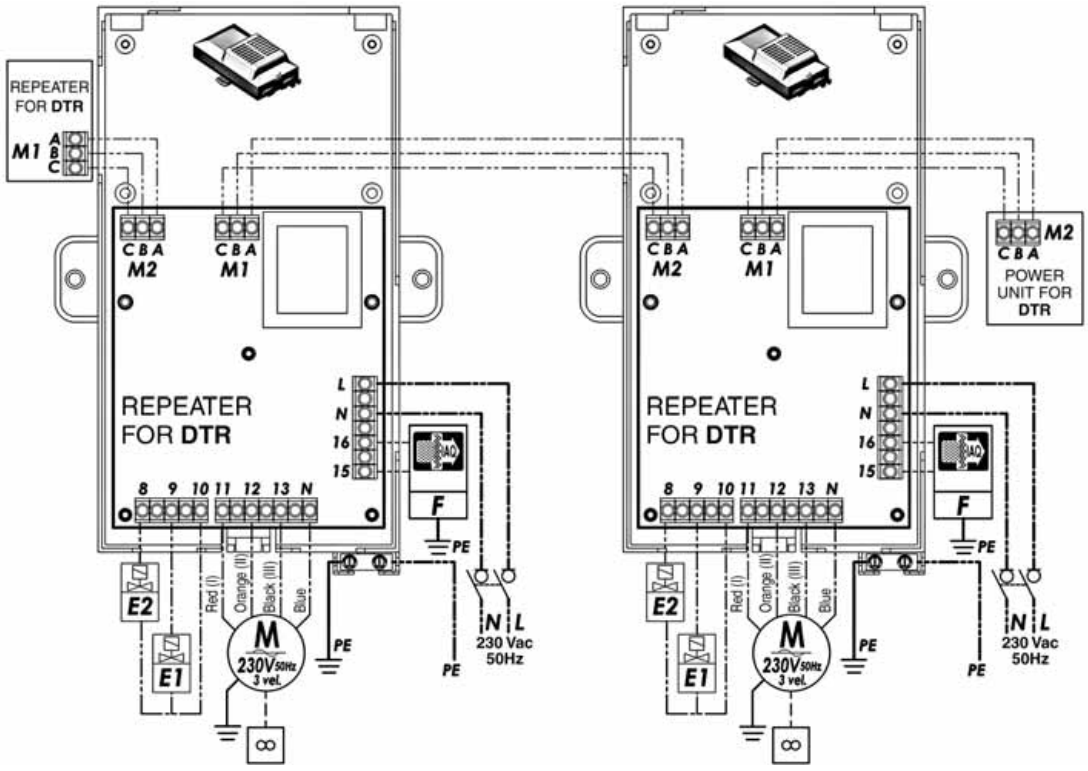

LEGEND

M = Fan
E = Water valve
E1 = Warm water valve
E2 = Chilled water valve
IN1 = Remote Summer/Winter switch
IN2 = SET Point reduction
TME = Low temperature cut-out thermostat

TMO 503

The TMO 503 control, S version for fan coils without valves and SV2 version for fan coils with valves, is designed to be installed in a series 503 wall box.
It is easy to use, it has a big and clear display, and a great precision.
The control is supplied integral with the external frame, but it is possible to use frames of the most known brand on the market (BTicino, Vimar, AVE, Gewiss).
The highest working electric absorbtion is 200 W.
If the fan coil has an higher absorbtion or more units are connected to the same control, the speed switch REC-H must be installed.

Identification	Code
TMO 503-S	9060170K

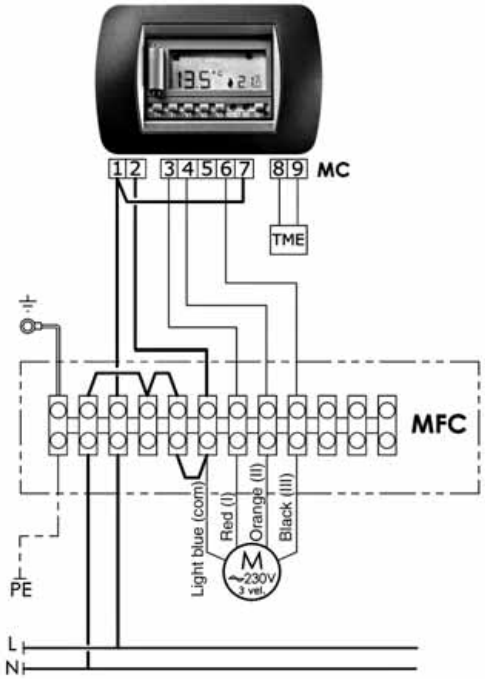

- Manual or automatic speed switch.
- Manual Summer/Winter switch.
- Electronic thermostat for fan control (ON-OFF).
- It allows to control the low temperature cut-out thermostat (TME), included with the control.

Identification	Code
TMO 503-SV2	9060172K

- Manual or automatic speed switch.
- Manual Summer/Winter switch.
- Electronic thermostat for valves control (ON-OFF).
- Simultaneus thermostatic control of the valves and fan.
- It allows to control the low temperature cut-out thermostat (TME), included with the control.

2 pipe units

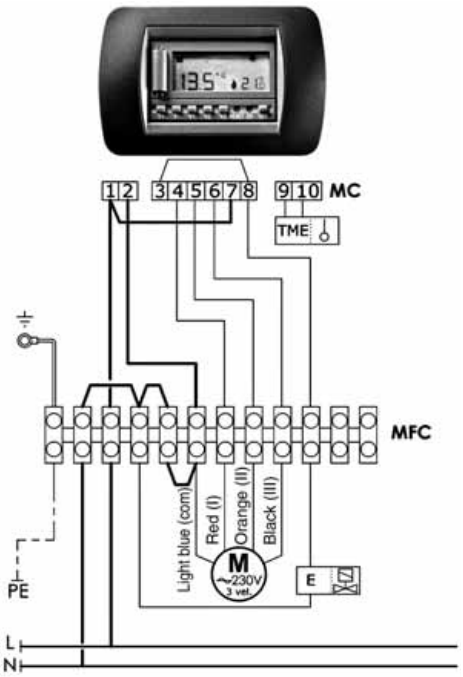

4 pipe units

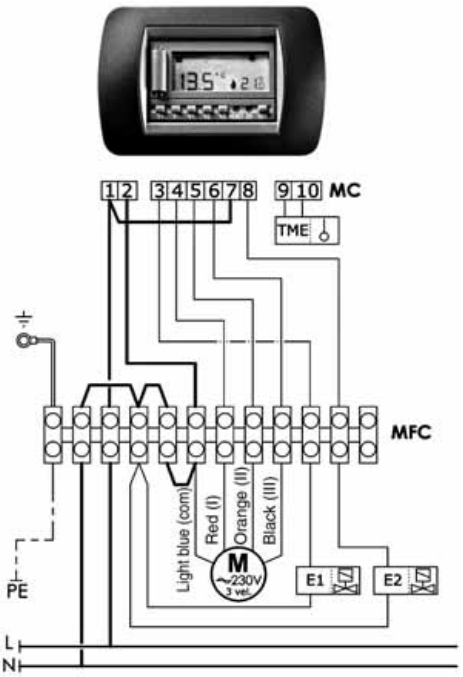

N.B.: with 4 pipe installations and continuous chilled and hot water supply, it allows the automatic summer/winter change-over in accordance to the room temperature (-1°C = Winter, +1°C = Summer, Neutral Zone 2°C).

LEGEND

MFC = Fan coil electronic board
MC = Control electronic board
M = Fan
E = Water valve
E1 = Warm water valve
E2 = Chilled water valve

TMO 503 with REC-H

The TMO 503 control with the REC-H speed switch can control up to 8 units with only one centralized wall control (the REC-H speed switch must be fitted on all the units).

TMO 503-S with REC-H diagram (Code 9060170K + Code 9060137K)

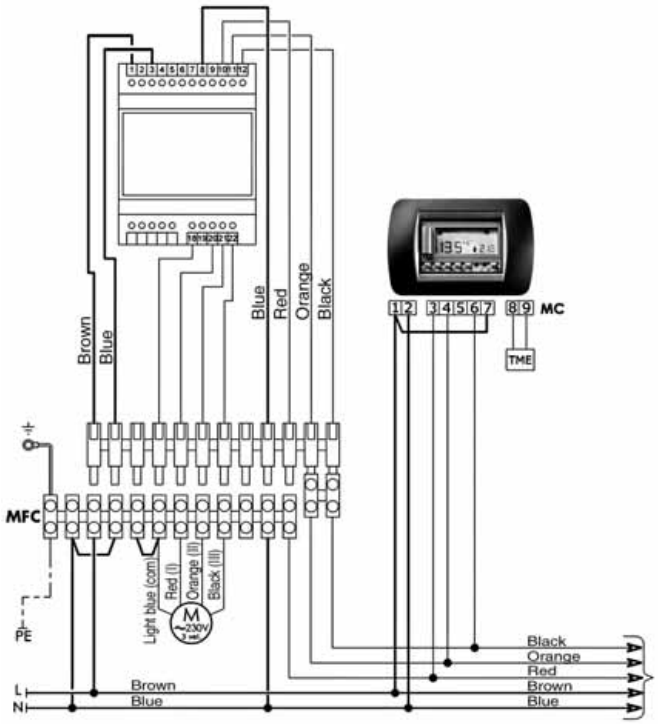

Diagram for fan coils **without** valve.

TMO 503-SV2 with REC-H diagram (Code 9060172K + Code 9060137K)

2 pipe units

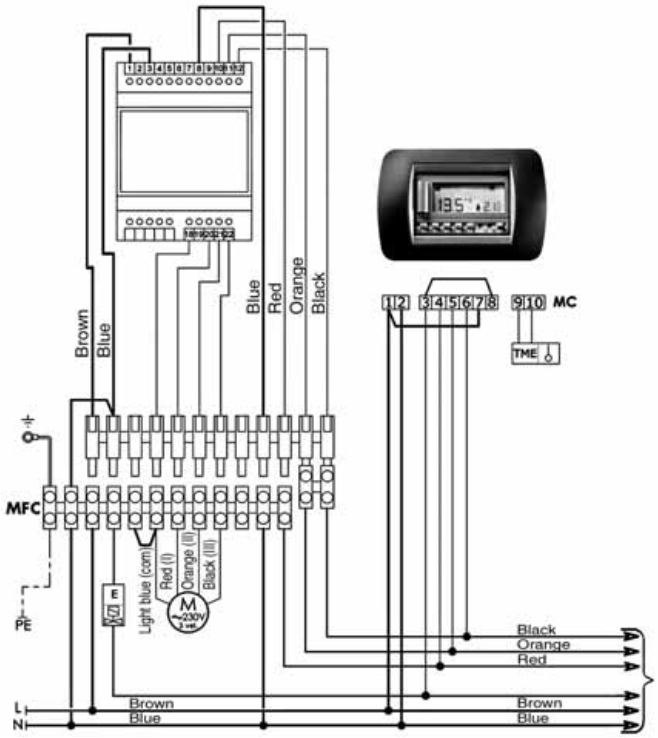

4 pipe units

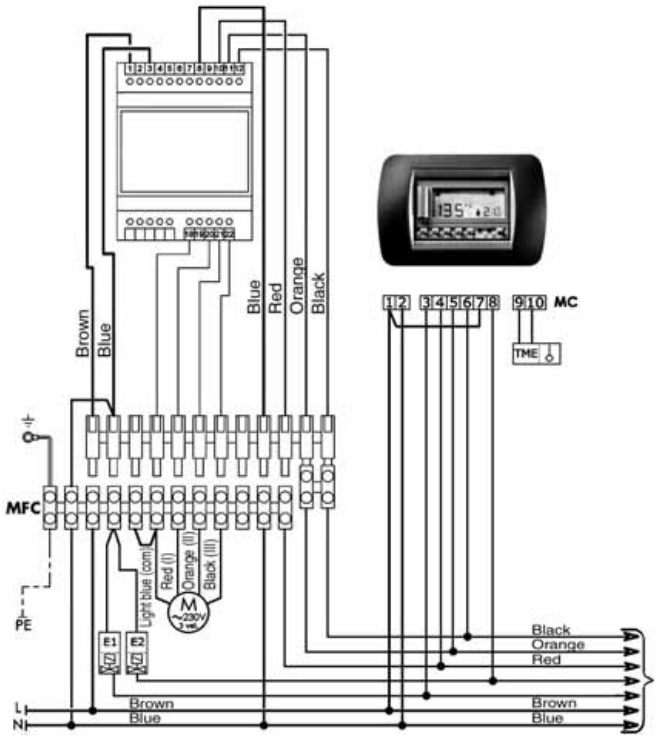

Diagram for fan coils **with** valve.

LEGEND

MFC	= Fan coil electronic board	**M**	= Fan	**E1**	= Warm water valve
MC	= Control electronic board	**E**	= Water valve	**E2**	= Chilled water valve

Unit with infra-red remote control

Description	Identification	Code
Infra-red remote control with electronic board fitted on the unit (VC-HC only)	IRC - M	9060175
Infra-red remote control with electronic board not fitted on the unit (CD only)	IRC - S	9060176

The **YFTM** units can be supplied with a micro-processor managing system operated by an infra-red remote control with liquid crystall display.

Integral with the unit is the room temperature probe, the water temperature probe (cut-out thermostat), the infra-red remote control and the electronic board with RS485 communicating connection which can control up to 20 units connected between them. The electronic board is of master/slave mode and the serial communicating connection allows the serial connection; in the master/slave connection of more units, it is recommended to install the infra-red receiver on the master unit.

Control operations:
- Temperature set.
- Fan speed switch with possible automatic speed selection.
- 24 hours on/off program.
- on/off cooling valve control.
- on/off heating valve control.
- Control of the valves only or of the valves and the fan together.
- Valve control of 2 or 4 pipe systems with winter/summer switch on the infra-red control.
- Valve control of 4 pipe systems with automatic heating/cooling mode selection with 2°C dead zone.
- Activating the sensor connected to the T3 contact of the board (non active in the standard configuration), it works like a cut-out thermostat: fitted between the coil fins it stops the fan when the water temperature is lower than 38°C and it starts the fan when the water temperature reaches 42°C.

IRC controls are not suitable for BEL electric heater.

The electronic board, fitted inside the electrical panel, can manage different control modes so as to best satisfy the requirements of the installation. These modes are selected by suitably positioning the configuration dipswitches, which define the following main functions:
- **2 pipe / 4 pipe** system
- Operation **without / with** remote control
- Continuous ventilation
- Close valve and stop fan in cooling mode (autofan function)
- Close valve and stop fan in heating mode (autofan function)
- Close valve and stop fan in both cooling and heating mode (autofan function)

The autofan function allows the simultaneous on/off control of the water valve and the fan, while at the same time optimising the operation of the unit. When reaching the set point, the controller closes the water valve (valve off) and only 3 minutes later stops the fan, so as to correctly compensate for the valve closing time.
To prevent the air probe from measuring an incorrect temperature, when the fan is off the controller runs a number of fan ON cycles to annul the effect of any stratification of the air in the room.

In two pipe systems, a water probe (T2 accessory) can be installed on the supply pipe to the unit upstream of the water valve. Based on the temperature read in this section of the pipe, the device will select either cooling or heating operation.

The electronic board also features a contact for connection to a window switch or remote enabling signal. When the contact is closed, the unit can operate, when the contact is open, the unit stops. The same contact can be used for starting and stopping the unit from an external timer or any other remote switching device.

In addition, a series of units can be switched on or off at the same time, by using a flip-flop switch connected to the terminals present on the board.

Sensors that require a 12 volt power supply, for example occupancy sensors, can be connected to other terminals on the electronic board and then to the on/off contacts. The board is able to power external sensors with a maximum current of 60mA.

T2 Change-Over for infra-red remote control (accessory)

Suitable for units with infra-red remote control only.

The NTC sensor, if connected to the T2 contact of the board, works like a change-over: fitted in contact to the supply pipe it controls automatically the winter/summer switch in accordance to the water temperature.

Identification	Code
T2	9079103K

Connection of the units in series and centralized management

Identification	Code
PCR - DI	9079102K

A group of **YFTM** units with infra-red remote control microprocessor can be connected via a serial link and can consequently be managed at the same time by just one infra-red remote control. Using the special jumper present on the board, one unit must be configured as the master, and all the others as slaves. It is clear that the remote control must be pointed at the receiver on the master unit. To avoid problems, it is recommended to install and connect the receiver only on the master unit.

Another option available for the serial communication between the units is the possibility to connect up to 60 **YFTM** units in series (the maximum length of the connection cable must not exceed 800 m) and manage them with just one wall-mounted intelligent PCR-DI controller. The wall-mounted controller can be used to set the operating mode for each individual unit connected, display the operating conditions of each individual unit, and set the on/off time sets for each day of the week. If more than 60 units need to be connected, two or more wall-mounted intelligent controllers must be used. Each wall-mounted controller only manages the units it is connected to.

The PCR-DI control is used to manage a series of cassettes, up to a maximum of 60 units, from one single control point. The PCR-DI control communicates via a serial line with all the units connected, with the possibility of controlling them all together or individually.
In fact, the unique address of each individual fan coil means that all the units can be called at the same time, or the individual unit called, to perform the following functions:

- display the current operating mode, the fan speed, the set point
- display the room temperature measured on the individual unit
- turn all the units on and off at the same time or alternatively each unit individually
- change the operating mode (fan only, heating, cooling, automatic changeover)
- change the set point

Each function can then be sent to all the units connected, or alternatively to each individual unit.
Different set points or operating modes can be set for each individual unit.

The PCR-DI panel can also be used for the time management of the units over the week. Two on times and two off times can be set on the units for each day of the week.

The weekly programming mode can be stopped at any time, returning to the manual setting and then weekly programming mode can subsequently be started again.

Maxinet program for managing a network of York IR hydronic terminals

Maxinet is a centralised control system for networks of York IR hydronic terminals, based on software that runs on Windows.
The Maxinet software offers a practical and economical solution for managing the terminals, with the simple click of the mouse.
The main characteristics include simplicity of use, an extremely complete and functional weekly program, and the possibility to access the historical operating data for each individual appliance connected.

The program exploits all the potential of our appliances with remote controls, representing an addition to the latter.

The Maxinet program is a control tool that can be used as a replacement for the remote control, or in parallel, however with the possibility of setting the priority, that is, the settings made using Maxinet can have priority over those made using the remote control.

The program can be used to:

- create uniform logical blocks (groups of units on individual floors, in offices or rooms).
- save weekly programs configured for different types of operation (summer, winter, mid seasons, closing periods etc.); these can then be recalled and activated with a simple click of the mouse.
  Weekly on/off cycles can be set for individual units or groups of units.
- set the operating conditions for each individual unit or groups of units (operating mode, fan speed, temperature setting).
- set the set point limits for each individual unit or groups of units.
- switch each individual unit or groups of units on or off.

The “Weekly Program” can be used to set the unit operating parameters for each day of the week.
Up to 20 different weekly programs can be set.

Time bands are available for each day of the week.
The time and the type of operation to be performed by the unit can be set for each band.
The time and the operating parameters can then be displayed before being sent to the unit and implemented.

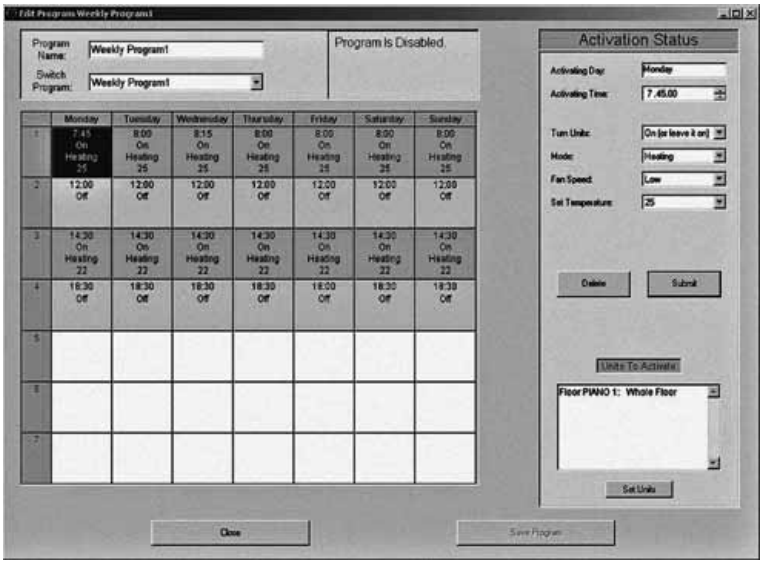

Unit with infra-red remote control

One especially useful function of the weekly program is to have the program to carry out timed checking routines to identify whether the operating mode or temperature setting have been modified on the terminals, for example using the local remote control. If activated, the routine will reset all the unit operating parameters to the values set in the weekly program.

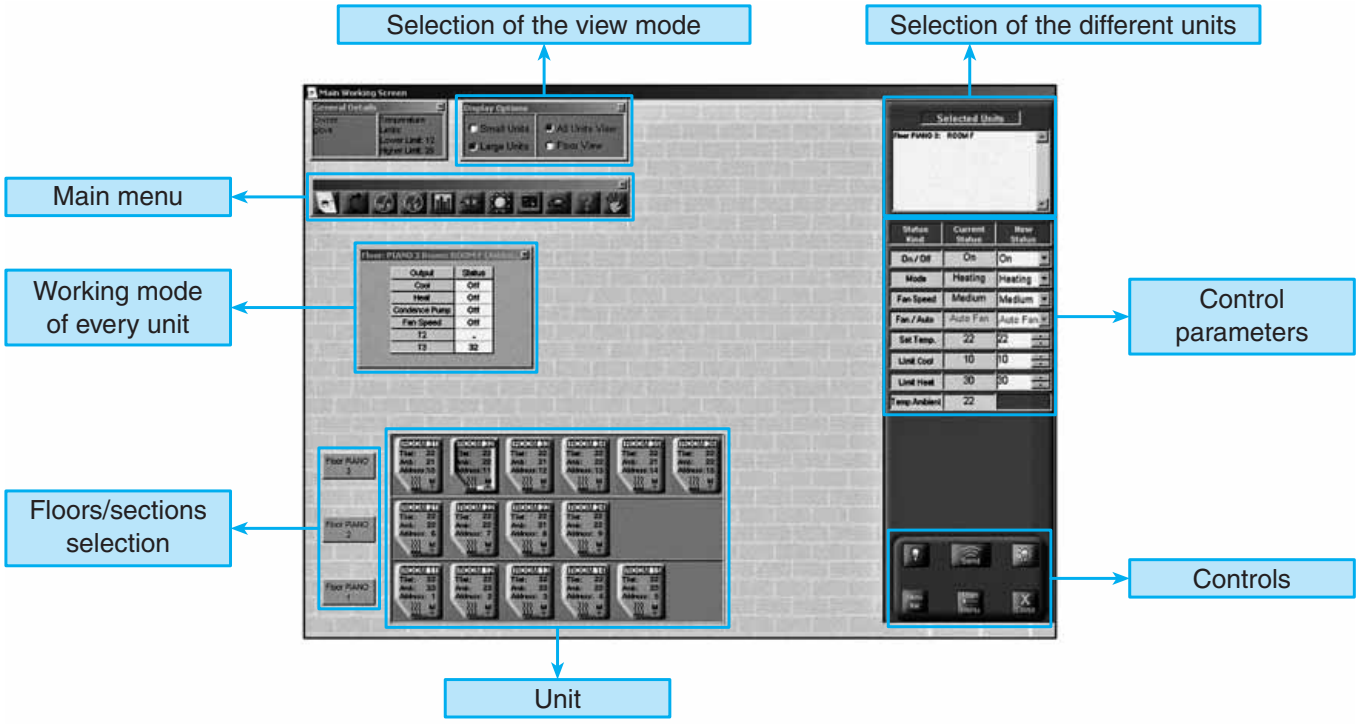

The main program screen can display and interact with the entire network of units. An individual unit, a group of units or the entire network can be called so as to make modifications to the operating mode and the set point. The user can then check the operating status of each individual unit, read the room temperature, the coil temperature and the operating status of the condensate drain pump or any alarms.

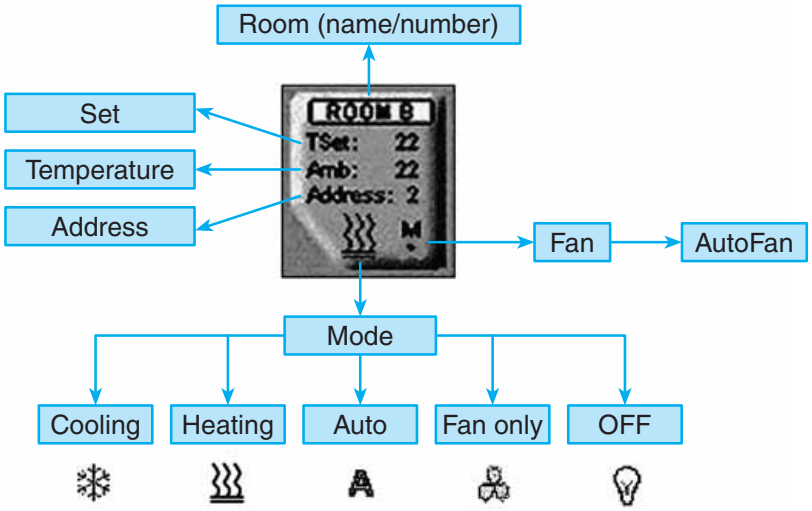

PC Maxinet Software

Connection of a YFTM network of more than 60 units

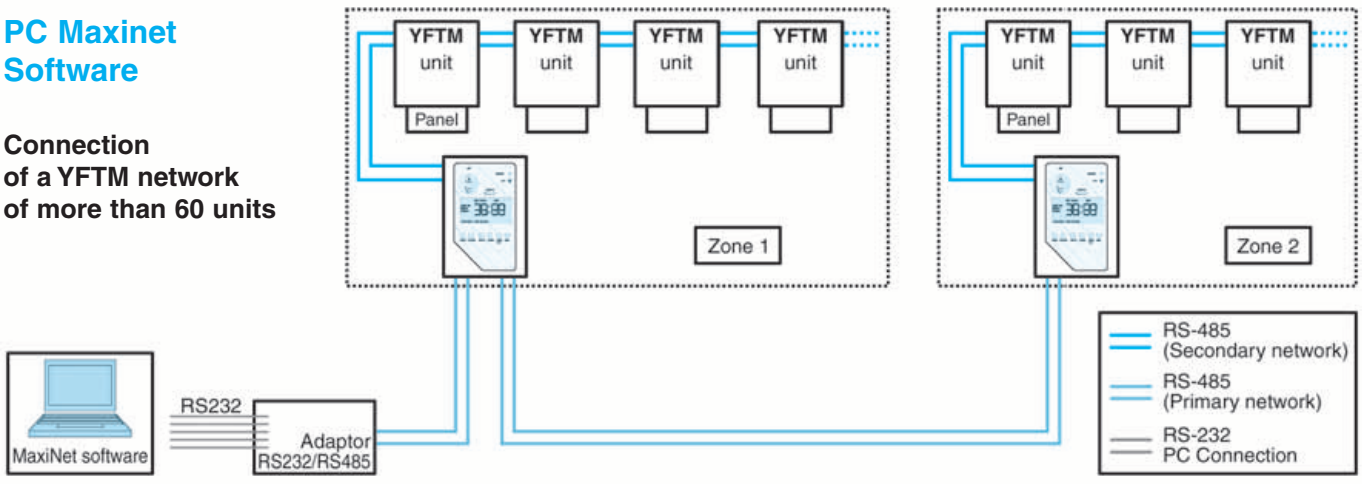

Identification	Code
S08R	9079105

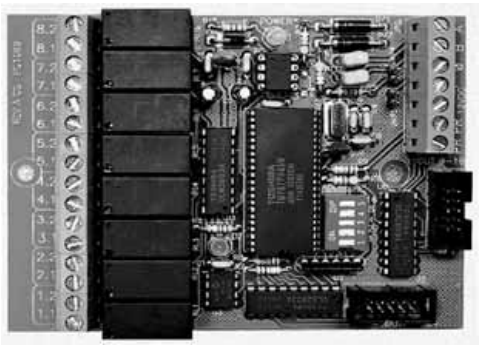

In addition to the air-conditioning units, MaxiNet can also work with general output cards.
Each card contains 8 outputs which can be connected to “On / Off” devices. Inserting a new output card can be done through the regular units setting. Handling the existing output cards is done through the output cards’ menu, which can be loaded from the working screen's menu bar. In the menu, choose the “General Outputs Cards” title.
The Out-Put card can be connected in a Maxinet network and controlled by the software. Up to 10 cards can used.

Description	Identification	Code
ETN +/-3°C with electronic board fitted on the unit	IRC - ETN - M	9060166
ETN +/-3°C with electronic board not fitted on the unit	IRC - ETN - S	9060167

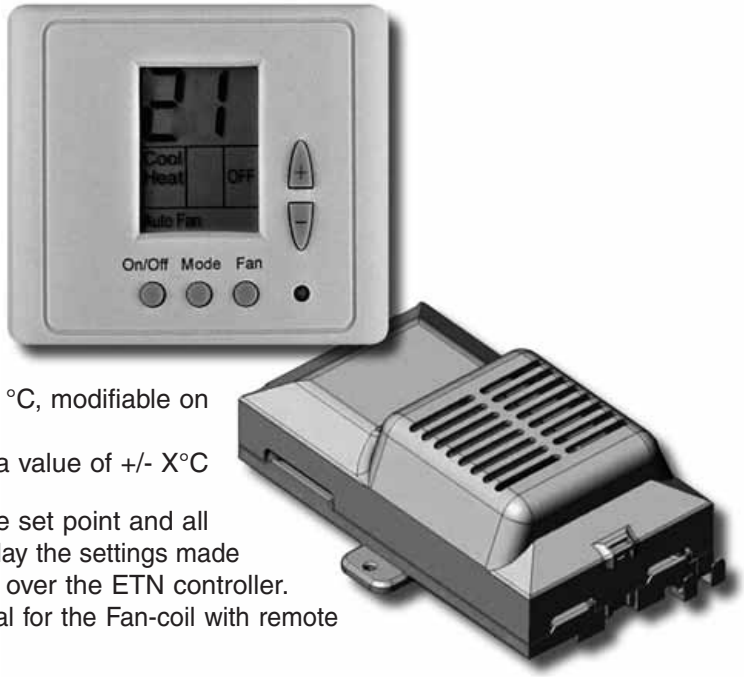

The IRC with ETN +/- 3 is a wall-mounted controller that can be connected to fan coils fitted with the IR electronic board and connected in an RS 485 network managed by the Maxinet supervisor system. The controller allows to adjust the set-temperature by raising or lowering the temperature set, defined with Maxinet, by increments of 1°C in a range of +/- X°C.

The controller features the following functions:
- switch the appliance on and off
- set the fan speed
- set the range of temperature settings (default +/- 3 °C, modifiable on site up to +/- 9°C)
- modify the set point determined by the system by a value of +/- X°C

The Maxinet system can set the operating mode, the set point and all other operating parameters of the unit, as well as display the settings made by the user. The Maxinet system always has priority over the ETN controller. For the correct use of the system, also see the manual for the Fan-coil with remote control and the Maxinet supervision program.

IRC control with ETN +/-3°C

One control for each unit

(Maximum length of the connection cable = 20 m)

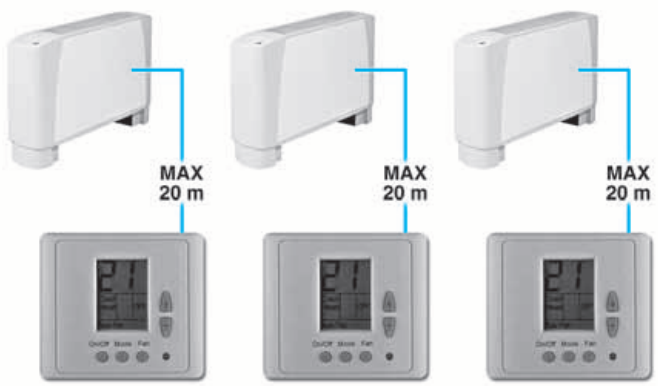

CONTROL OPERATIONS / CONTROL IDENTIFICATION	HC - CD						VC - HC				
	BR	TR	ATR	DTR	TMO-503-S	TMO-503-SV2	BL	BTL	TL	TLC	ATL
ON-OFF switch	●	●	●	●	●	●	●	●	●	●	●
Manual 3 speed switch	●	●	●	●	●	●	●	●	●	●	●
Manual/Automatic 3 speed selection				●	●	●					●
Summer/Winter switch		●	●	●	●	●		●	●		●
Remote centralized Summer/Winter switch or by an automatic change-over fitted on the water pipe		●	●	●		●				●	●
Automatic Summer/Winter switch with neutral zone for 4 pipe installation with 2 valves			●	●							●
Room thermostat for fan control (ON-OFF)		●	●	●	●			●	●	●	●
Room thermostat for 1 valve control (2 pipe installation)		●	●	●		●			●	●	●
Room thermostat for 2 valve control (4 pipe installation)		●	●	●		●			●	●	●
Simultaneous thermostatic control of the valves and fan			●			●					●
Room thermostat for chilled water valve (SUMMER) and electric resistance (WINTER) control (in winter only the resistance is working)		●	●	●					●	●	●
Room thermostat for fan and electric resistance control				●							
Installation of electronic low temperature CUT-OUT thermostat (TME)		●	●	●	●	●			●	●	●
Installation of bimetallic low temperature CUT-OUT thermostat (TMM)	●						●				
CONTROL CODES	9060540	9060541	9060542	9060521	9060170K	9060172K	9060130K	9060131K	9060132K	9060133K	9060134K

TME low temperature cut-out thermostat

To be fitted between the coil fins;
when connecting the control, the TME probe cable
must be separated from the power supply wires.

To be used with the following controls: TL, TLC, ATL, TR, ATR and DTR.

It stops the fan when the water temperature is lower than 38°C
and it starts the fan when is higher than 42°C.

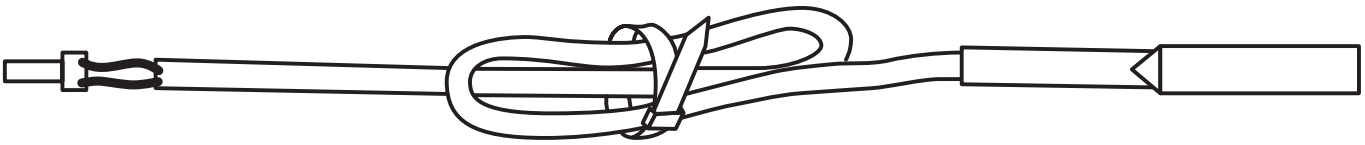

VERSION	*YFTM*
MODEL	*VC - HC - CD*
CODE	3021091K

TMM low temperature cut-out thermostat

To be installed in contact with the hot water circuit.
To eliminate cold air blow.
Installed by the installing engineer.
For units working on heating only.

To be used with the following controls: BL and BR.

It stops the fan when the water temperature is lower than 32°C
and it starts the fan when is higher than 42°C.

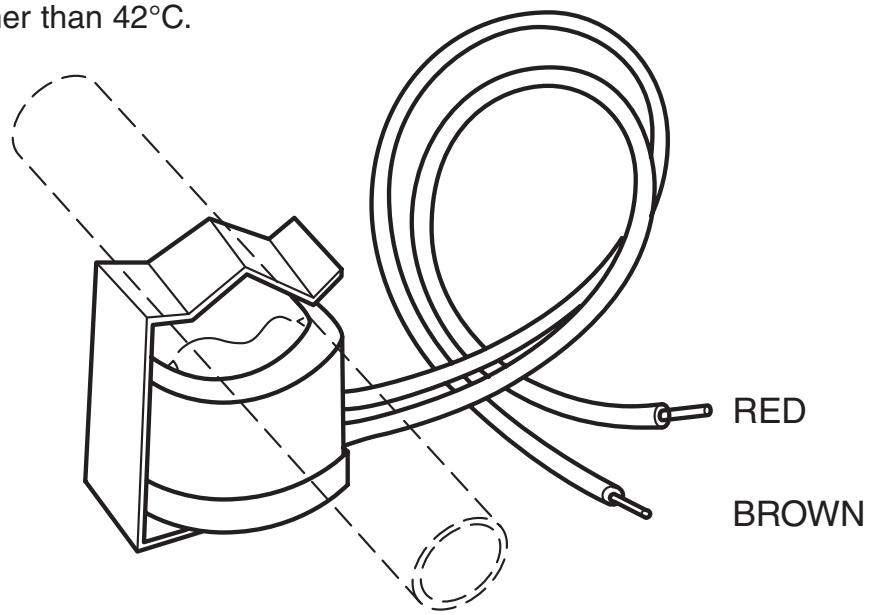

VERSION	*YFTM*
MODEL	*VC - HC - CD*
CODE	9053048K

Change Over CH 15-25

Automatic summer/winter switch
to be installed in contact with the water circuit.
For 2-tube installations only
(not to be used with 2 way valve).

To be used with the following controls: TLC, TR, ATR and DTR.

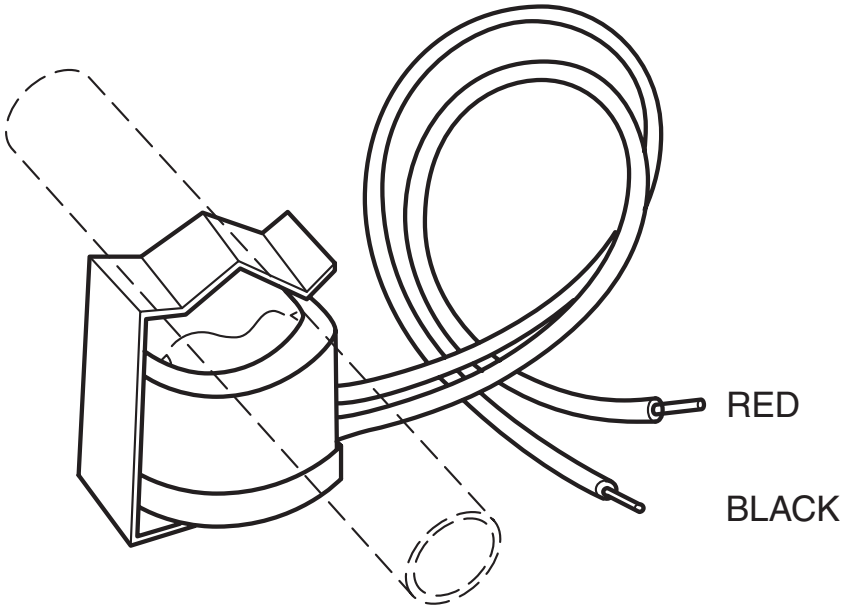

VERSION	*YFTM*
MODEL	*VC - HC - CD*
CODE	9053049K

Identification	Code
KIT	9060103K

Terminal board adaptor kit

To connect the units **VC** and **HC**
with the BR, TR, ATR or TMO-503 controls,
a terminal board adaptor kit is available on request.

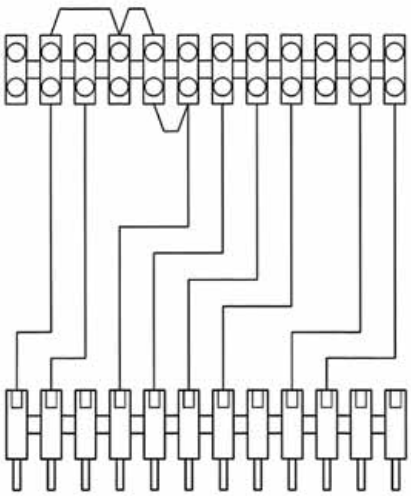

VERSION	*YFTM*
MODEL	*VC - HC*
CODE	9060103K

BEL electric heater

1 PHASE 230V

Electric heater with integral: safety thermostat and relay control.

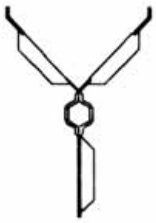

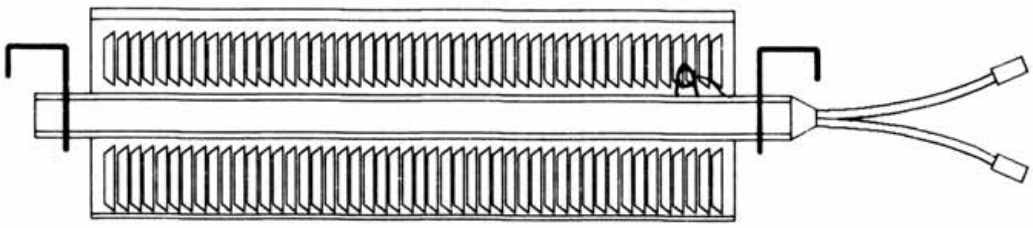

VERSION	*YFTM*
MODEL	*VC - HC - CD*

SIZE	*1*			*2*			*3 - 4*			*5 ÷ 7*		
Watt	1000	600	400	1500	900	600	2000	1250	750	2500	1500	1000
CODE	9060630K	9060625K	9060620K	9060631K	9060626K	9060621K	9060632K	9060627K	9060622K	9060633K	9060628K	9060623K

Extension condensate collection tray to cover valve assembly

ACTV
(for vertical units)

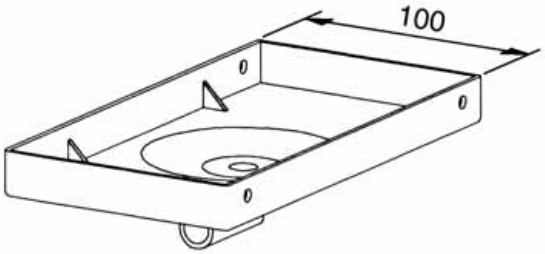

VERSION	*YFTM*
MODEL	*VC - HC - CD (vertical)*
CODE	6060400K

ACTH
(for horizontal units)

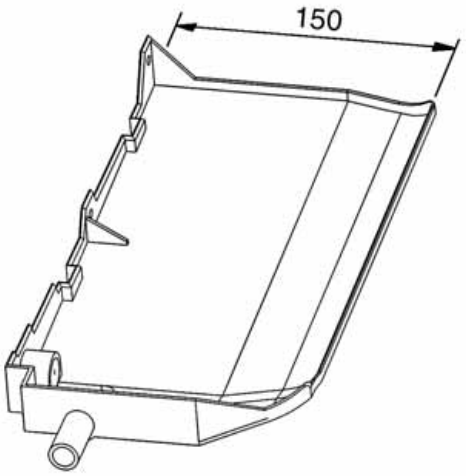

VERSION	*YFTM*	
MODEL	*HC - CD (horizontal)*	
CONNECTION SIDE	LEFT	RIGHT
TYPE	*ACTH-L*	*ACTH-R*
CODE	6060402K	6060403K

SCR plastic condensate drain pipe with fast connection
(allows correct condensate drain)

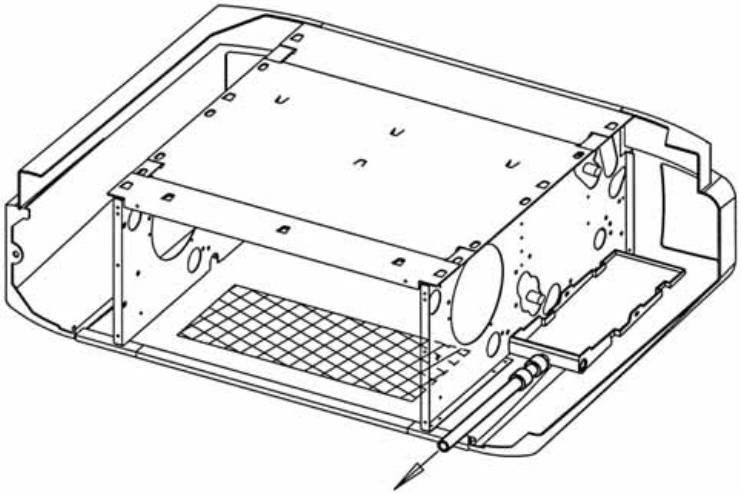

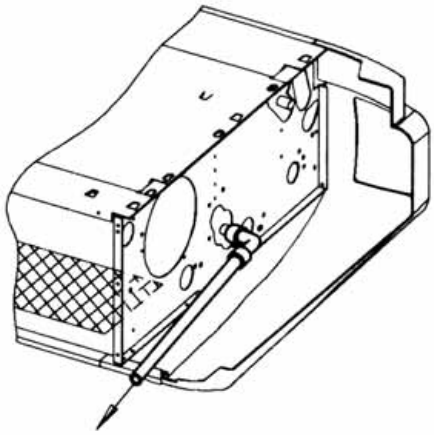

VERSION	*YFTM*
MODEL	*HC - CD*
CODE	6060420K

FT feet

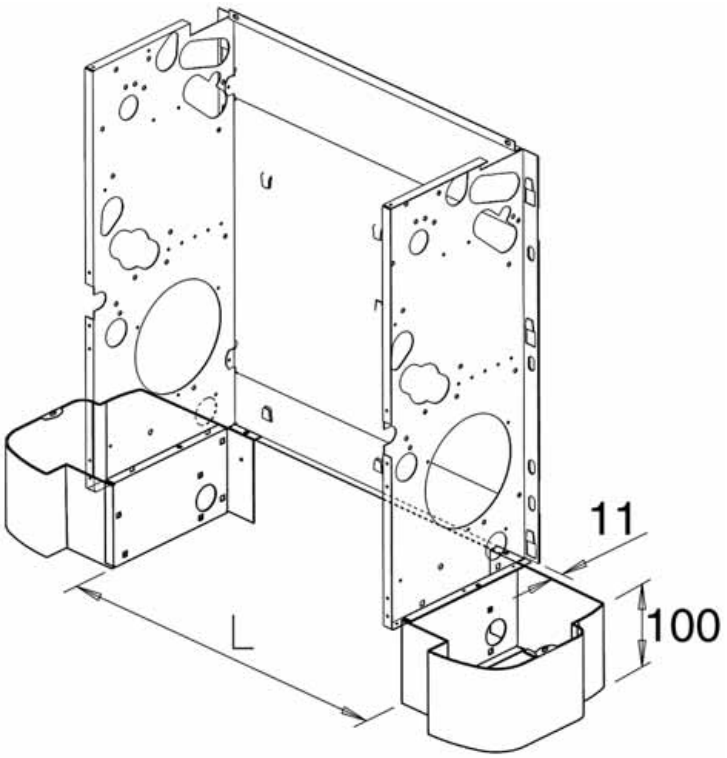

VERSION	*YFTM*
MODEL	*VC*

VERSION			CODE
		L	
YFTM	*1*	430	9060150K
YFTM	*2*	645	
YFTM	*3-4*	860	
YFTM	*5*	1119	

GAP

Aluminium low intake grid
(to be installed with FT feet)

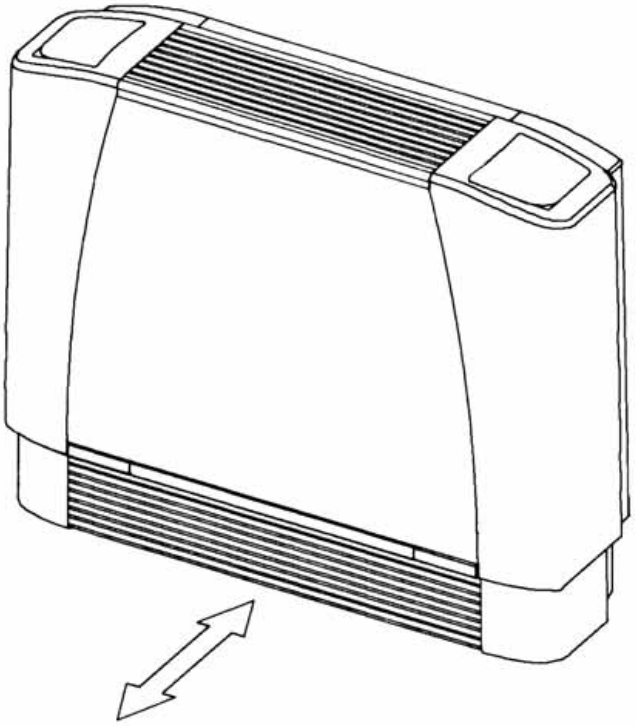

VERSION	*YFTM*
MODEL	*VC*

SIZE	*1*	*2*	*3 - 4*	*5*
CODE	9060230K	9060231K	9060232K	9060233K

FAD fresh air mixing damper (can be motorized on request)

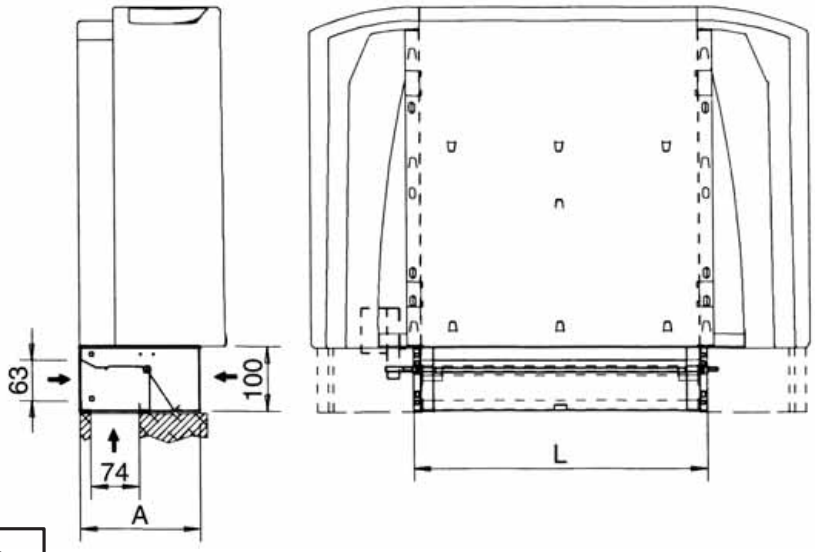

VERSION	*YFTM*
MODEL	*VC - CD*

VERSION		A	L	CODE
YFTM	*1*	185	454	6060410K
YFTM	*2*	185	669	6060411K
YFTM	*3-4*	185	884	6060412K
YFTM	*5*	185	1099	6060413K

Belimo accessory

DESCRIPTION	IDENTIFICATION
Belimo motor fitted on the unit for motorized working of the damper (available with "**-E**" control only)	BESAE

RCPV rear closing panel

(for vertical units)

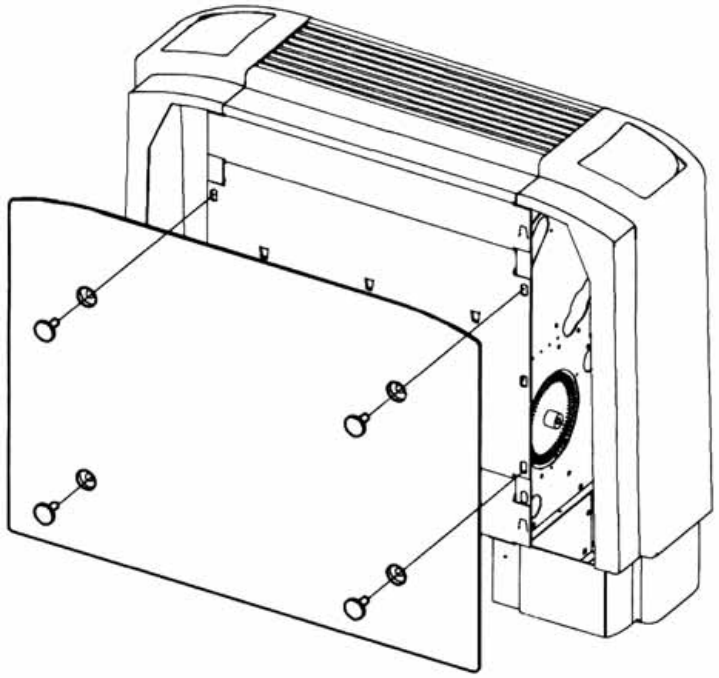

VERSION	*YFTM*
MODEL	*VC - HC*

SIZE	*1*	*2*	*3 - 4*	*5*
CODE	9070140K	9070141K	9070142K	9070143K

RCPH bottom closing panel

(for horizontal units)

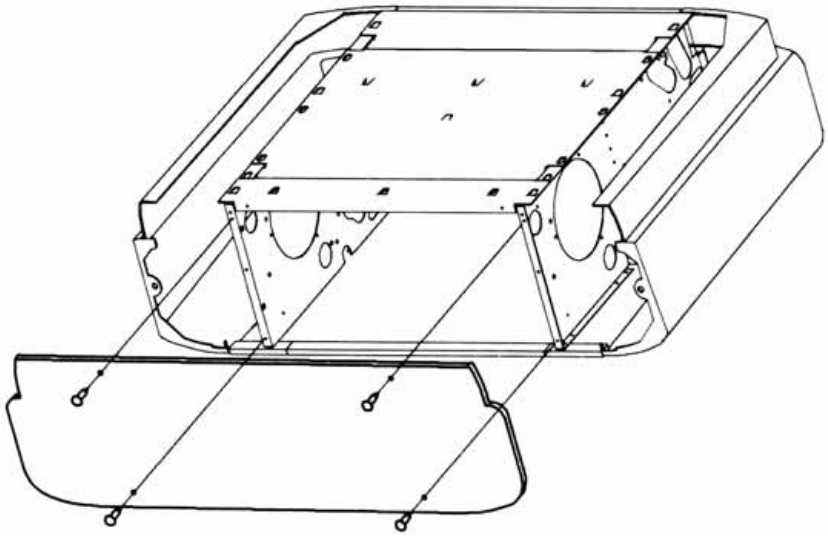

VERSION	*YFTM*
MODEL	*HC*

SIZE	*1*	*2*	*3 - 4*	*5*
CODE	9070220K	9070221K	9070222K	9070223K

KAF frontal intake kit

Bottom closing panel and filter sliding guides.

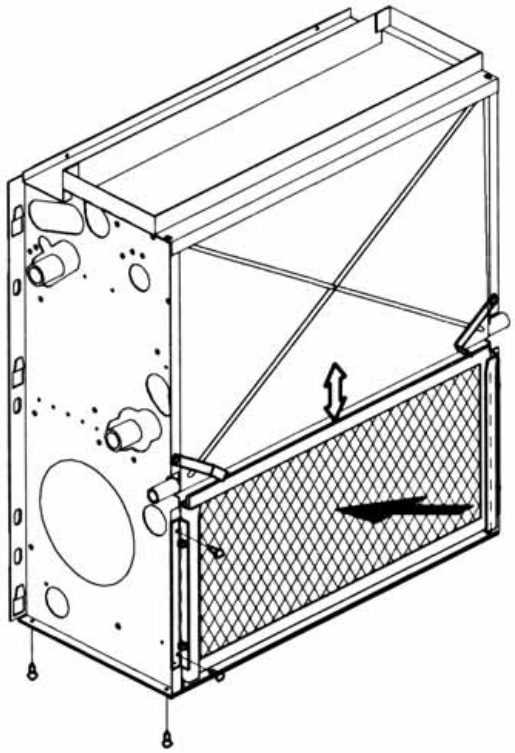

VERSION	*YFTM*
MODEL	*CD*

SIZE	*1*	*2*	*3 - 4*	*5*
CODE	9060220K	9060221K	9060222K	9060223K

FRD straight inlet flange

Can be used together with GRAG air inlet grid. Made of galvanized steel.

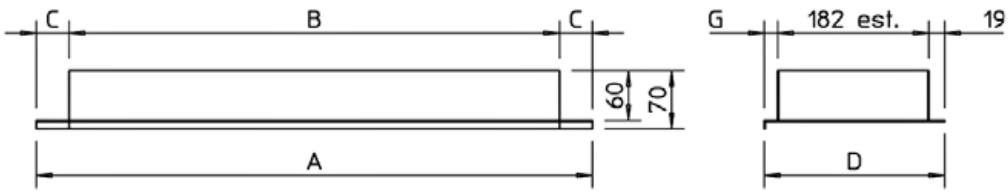

VERSION	*YFTM*
MODEL	*CD*

SIZE	TYPE	A	B	C	D	G	CODE
1	FRD - 1	454	390	32	217	16	9060720K
2	FRD - 2	669	590	39,5	217	16	9060721K
3 - 4	FRD - 3/4	884	790	47	217	16	9060722K
5	FRD - 5	1099	990	54,5	217	16	9060723K

FMD straight outlet flange

Made of galvanized steel.

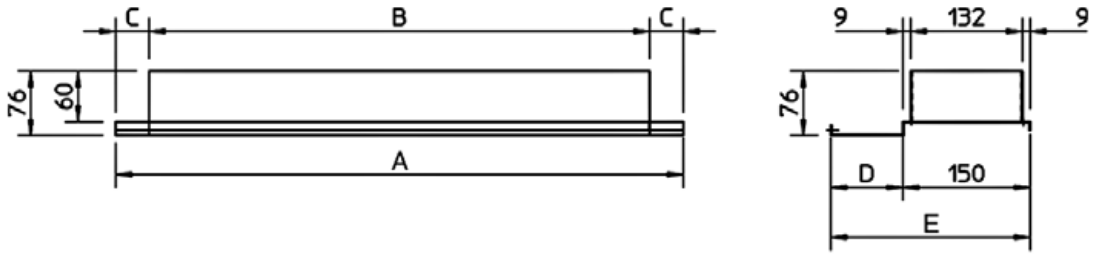

VERSION	*YFTM*
MODEL	*CD*

SIZE	TYPE	A	B	C	D	E	CODE
1	FMD - 1	454	390	32	55	205	9060730K
2	FMD - 2	669	590	39,5	55	205	9060731K
3 - 4	FMD - 3/4	884	790	47	55	205	9060732K
5	FMD - 5	1099	990	54,5	85	205	9060733K

GRAG air inlet grid

To be used with FRD straight inlet flange. Made of anodized aluminium.

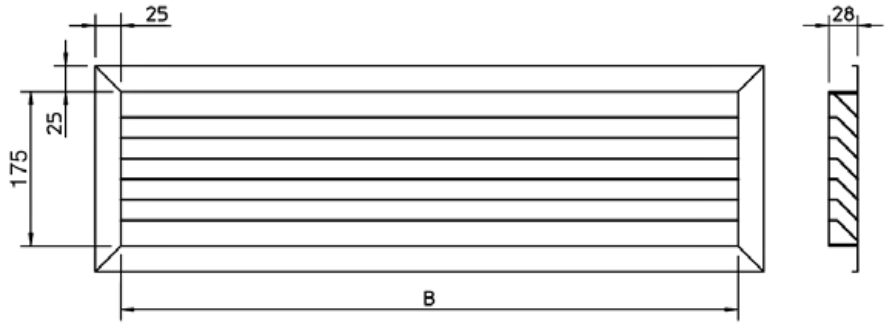

VERSION	*YFTM*
MODEL	*CD*

SIZE	TYPE	DESCRIPTION	B	CODE
1	GRAG - 1	Grid 400x200	375	9060764K
2	GRAG - 2	Grid 600x200	575	9060765K
3 - 4	GRAG - 3/4	Grid 800x200	775	9060766K
5	GRAG - 5	Grid 1000x200	975	9060767K

BMA air outlet grid

Double louvre grid to be fitted to the duct and to the FMD straight outlet flange.
Made of anodized aluminium.

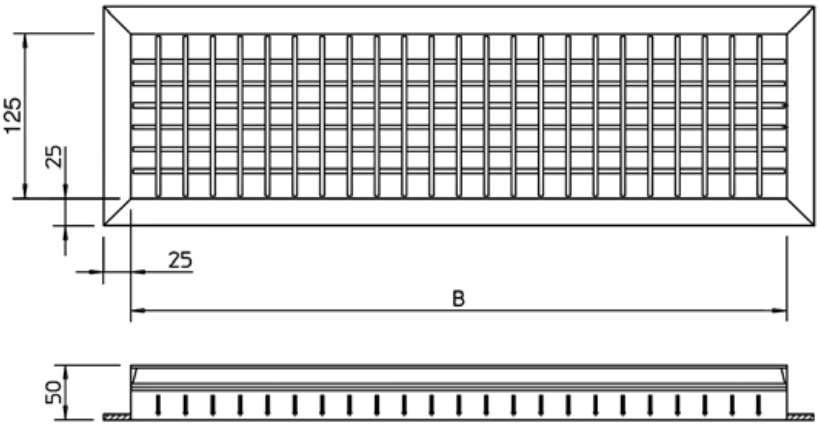

VERSION	*YFTM*
MODEL	*CD*

SIZE	TYPE	B	CODE
1	BMA - 1	375	9060750K
2	BMA - 2	575	9060751K
3 - 4	BMA - 3/4	775	9060752K
5	BMA - 5	975	9060753K

Valves pressure drop

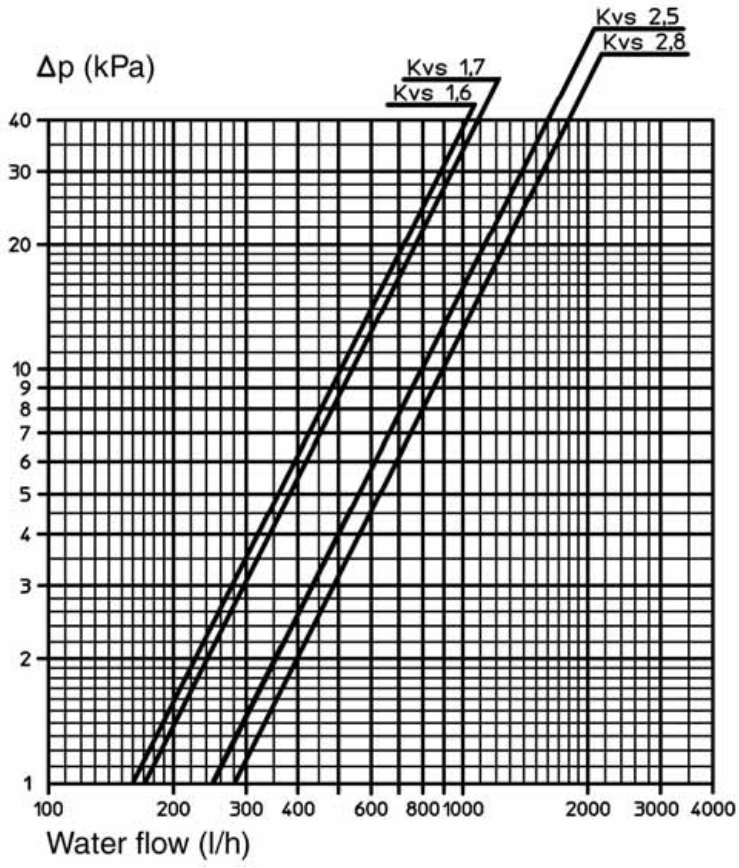

MBV
main coil 3 way valve

Control valve kit: 3 way valve, ON-OFF, with electric motor and mounting kit with micrometric lockshield valve.

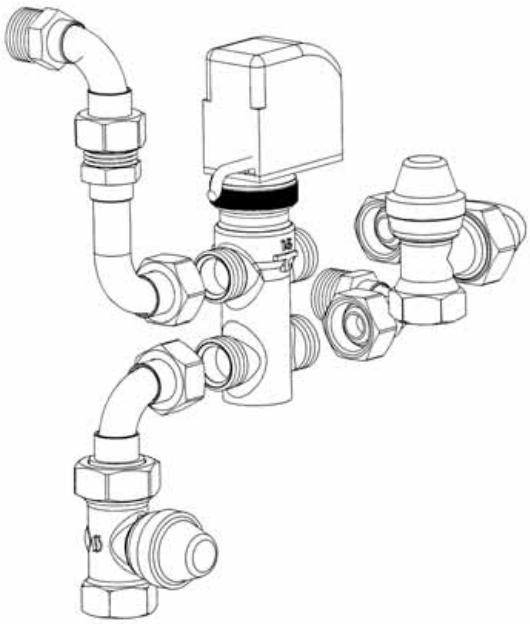

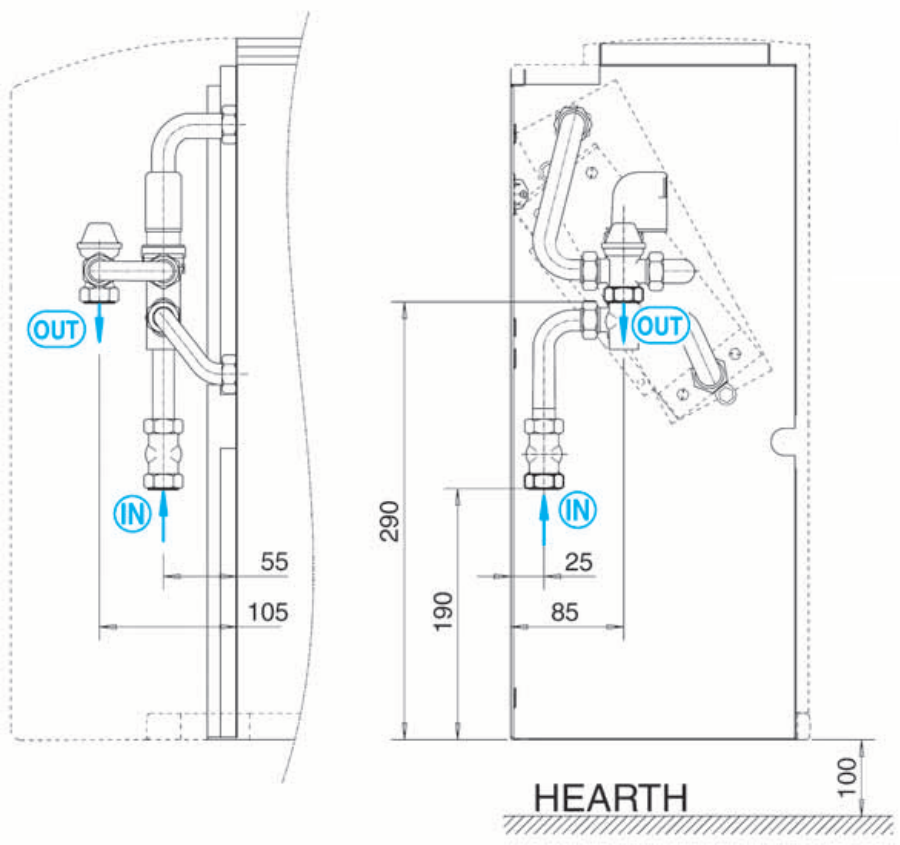

VERSION	*YFTM*
MODEL	*VC - HC - CD*

VERSION		*YFTM 1 ÷ 3*	*YFTM 4 - 5*
FITTED		9060470	9060471
NOT FITTED		9060473	9060474
Valve	DN	15	20
	(Ø)	(1/2")	(3/4")
	Kvs	1,6	2,5
Micrometric lockshield valve	DN	15	15
	(Ø)	1/2"F	1/2"F
	Kvs	2	2

Dimensions ± 10 mm.

ABV
auxiliary coil 3 way valve

Control valve kit: 3 way valve, ON-OFF, with electric motor and mounting kit with micrometric lockshield valve.

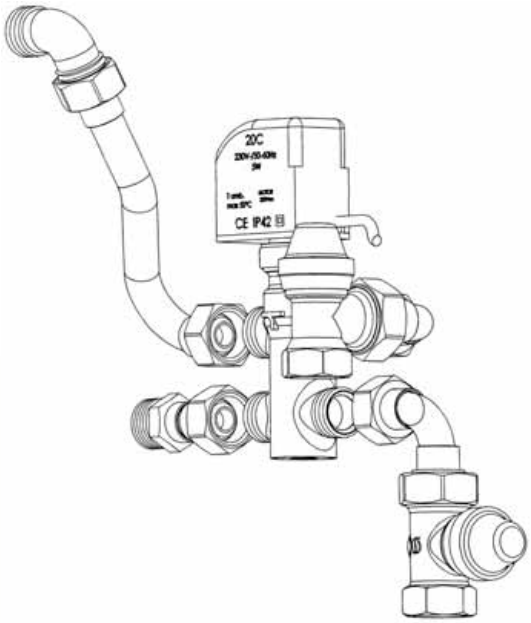

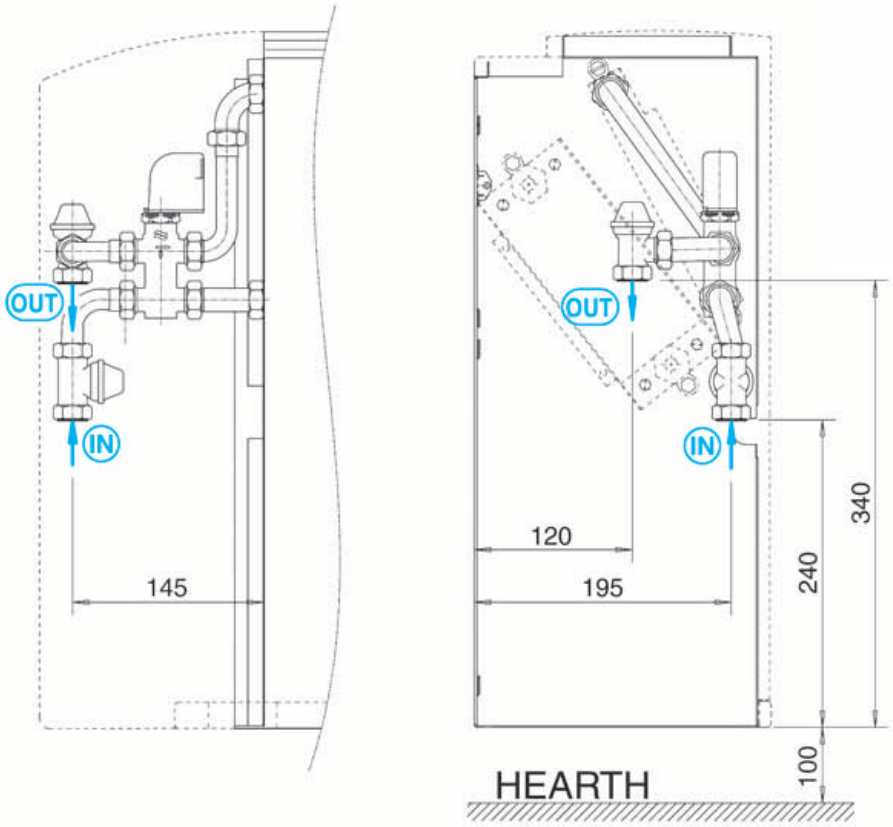

VERSION	*YFTM*
MODEL	*VC - HC - CD*

FITTED		9060472
NOT FITTED		9060475
Valve	DN	15
	(Ø)	(1/2")
	Kvs	1,6
Micrometric lockshield valve	DN	15
	(Ø)	1/2"F
	Kvs	2

Dimensions ± 10 mm.

VS
simplified kit for 3 way valve *(concealed model only)*

3 way valve, (ON-OFF)
with electric motor and mounting kit.
Valve with flat connection
without micrometric lockshield valve.

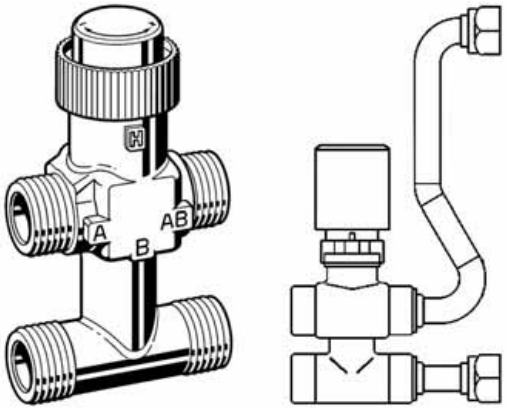

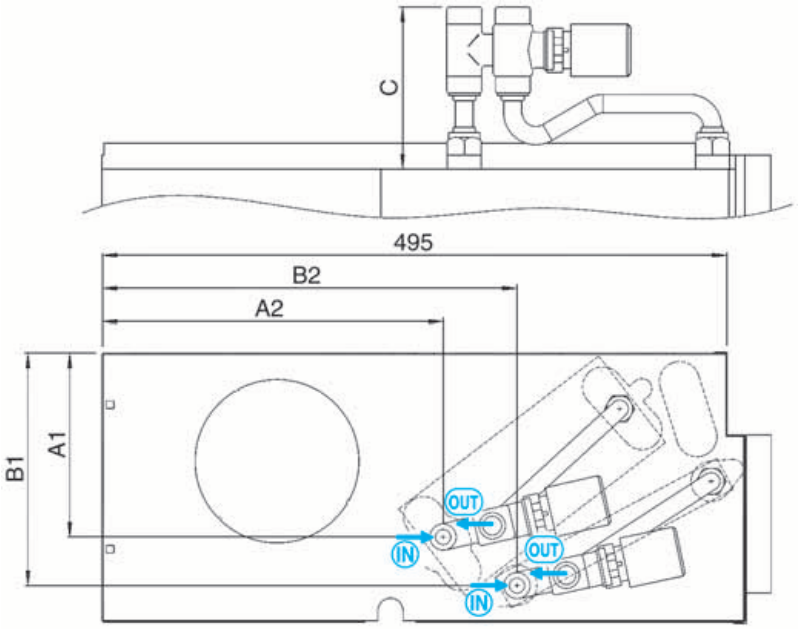

VERSION	*YFTM*
MODEL	*CD*

VERSION		*YFTM 1 ÷ 3* AND ADDITIONAL COIL	*YFTM 4 - 5*
FITTED		9060483	9060484
NOT FITTED		9060480	9060481
Valve	DN	15	20
	(Ø)	(1/2")	(3/4")
	Kvs	1,6	2,5

		COIL				
		MAIN		ADDITIONAL		
VERSION	MODEL	A1	A2	B1	B2	C
YFTM	*1 ÷ 3*	152	270	185	330	116
YFTM	*4 - 5*	152	268	185	330	124

Dimensions ± 10 mm.

V2
2 way valve for main and additional coil

Control valve kit:
2 way valve, ON-OFF,
with electric motor and mounting kit.

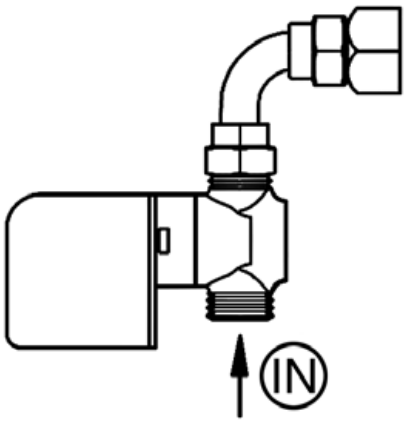

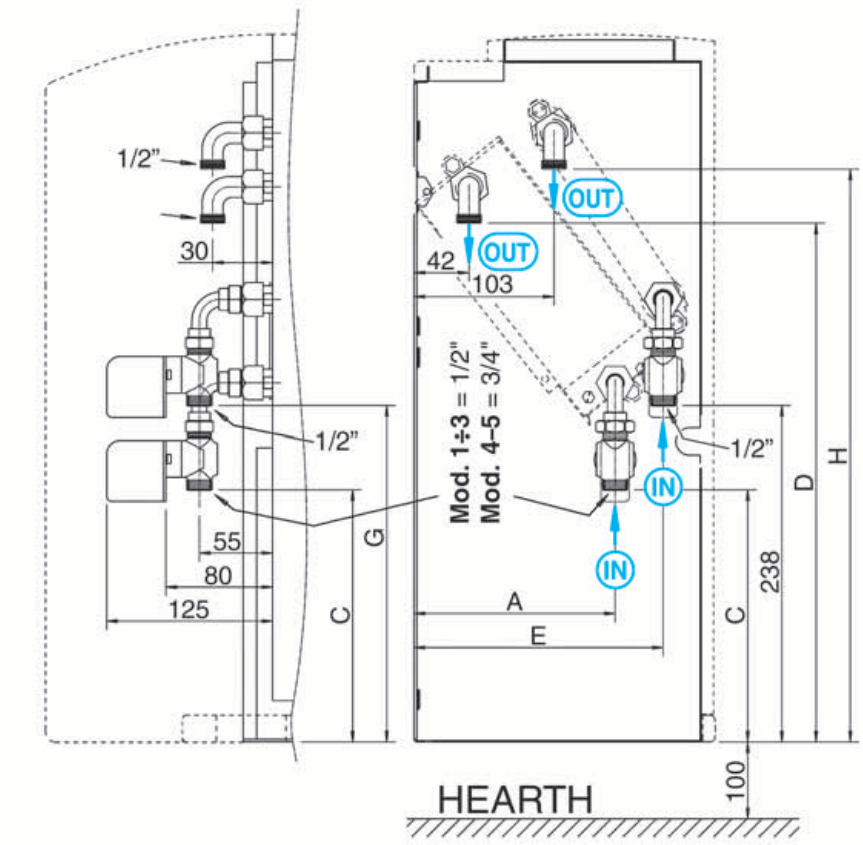

VERSION	*YFTM*
MODEL	*VC - HC - CD*

VERSION		*YFTM 1÷3* AND ADDITIONAL COIL	*YFTM 4-5*
FITTED		9060476	9060477
NOT FITTED		9060478	9060479
Valve	DN (Ø)	15 (1/2")	20 (3/4")
	Kvs	1,7	2,8

VERSION	A	B	C	D	E	F	G	H	FITTED	NOT FITTED
YFTM 1 ÷ 3	149	41	180	386	186	103	239	456	9060476	9060478
YFTM 4 - 5	150	43	181	438	186	103	239	456	9060477	9060479

Dimensions ± 10 mm.

**The descriptions and illustrations provided in this publication are not binding:
we reserve the right, whilst maintaining the essential characteristics
of the types described and illustrated, to make, at any time,
without the requirement to promptly update this piece of literature,
any changes that it considers useful for the purpose
of improvement or for any other manufacturing or commercial requirements.**

YORK®
BY JOHNSON CONTROLS

YFTM - 04/10
Cod. A4670142 C/04/10